NEW YORK CITY
DEPARTMENT OF TRANSPORTATION

STANDARD HIGHWAY SPECIFICATIONS

Volume II: Supplemental Construction Methods

FEBRUARY 1, 2009

INTRODUCTION

This publication has been prepared by the New York City Department of Design and Construction (NYCDDC) to provide a compilation of standard requirements, called specifications, used by the New York City Department of Transportation for street construction contracts. These specifications define the Contractor's responsibility in meeting each specification, enumerate the Department's expectations and how they are going to measure and pay, and explain what the Contractor is expected to provide. When this publication, entitled Standard Highway Specifications and dated February 1, 2009, is incorporated by reference into the Department's construction contracts, it is made a part of that document.

(NO TEXT ON THIS PAGE)

TABLE OF CONTENTS

Volume II of II

DIVISION VI - SUPPLEMENTAL CONSTRUCTION METHODS 293

SECTION 6.01 - Clearing and Grubbing 295
SECTION 6.02 - Unclassified Excavation 297
SECTION 6.03 - Stripping of Pavement Surfaces 300
SECTION 6.04 – Granite Block Wearing Course 302
SECTION 6.05 (VACANT) 306
SECTION 6.06 - Granite Block and Concrete Paver Sidewalk 306
SECTION 6.07 - Bluestone Flags 309
SECTION 6.08 - Concrete Curb, Re-used Steel Facing 313
SECTION 6.09 - Concrete Headers 314
SECTIONS 6.10 THRU 6.17 (VACANT) 316
SECTION 6.18 - Picket Fence 316
SECTION 6.19 (VACANT) 318
SECTION 6.20 - Broken Stone Ballast 319
SECTION 6.21 - Hydrants, Relocated 319
SECTION 6.22 - Additional Hardware 322
SECTION 6.23 - Fire Department Facilities 323
SECTION 6.24 - Asphaltic Concrete Sidewalk 338
SECTION 6.25 - Temporary Signs 339
SECTION 6.26 - Timber Curb 340
SECTION 6.27 - Demolition of Structures 342
SECTION 6.28 A - Timber Barricades 345
SECTION 6.28 B - Type III Breakaway Barricades (Alternate A or Alternate B) 347
SECTION 6.29 (VACANT) 348
SECTION 6.30 - Beam Type Guide Rail and Mall Barrier 348
SECTION 6.31 - Precast Concrete Wheel Stops 352
SECTION 6.32 (VACANT) 354
SECTION 6.33 - Steel Faced Mall Nosings 354
SECTION 6.34 - Chain Link Fence 355
SECTION 6.35 (VACANT) 356
SECTION 6.36 - Structural Repair and Adjustment of (City Owned) Utility Structures 357
SECTIONS 6.37 THRU 6.38 (VACANT) 358
SECTION 6.39 - Mobilization 358
SECTION 6.40 - Engineer's Field Office 359
SECTION 6.40 TFS - Transportation for the Engineer 366
SECTION 6.41 - Line-and-Grade Surveys 368
SECTION 6.42 - Beam Barriers For Dead-End Streets 370
SECTION 6.43 - Photographs 372
SECTION 6.44 - White and Yellow Thermoplastic Reflectorized Pavement Markings 373
SECTION 6.45 (VACANT) 380
SECTION 6.46 - Dense-Graded Stone Base 380
SECTION 6.47 - Interlocking Concrete Pavers 382
SECTION 6.48 - Curb Painting 384
SECTION 6.49 - Temporary Pavement Markings 385
SECTION 6.50 - Cleaning of Drainage Structures 389
SECTION 6.51 (VACANT) 390
SECTION 6.52 - Uniformed Full-Time Flagperson 390
SECTION 6.53 - Remove Existing Lane Markings 394
SECTION 6.54 (VACANT) 394

SECTION 6.55 - Sawcutting Existing Pavement *394*
SECTIONS 6.56 AND 6.57 (VACANT) *395*
SECTION 6.58 - Tack Coat *395*
SECTION 6.59 - Concrete Barrier *398*
SECTION 6.59 P - Temporary Concrete Barrier *400*
SECTION 6.60 - Asphalt Block Pavers *402*
SECTIONS 6.61 THRU 6.65 (VACANT) *407*
SECTION 6.66 - Brick Pavers *407*
SECTION 6.67 - Subbase Course, Select Granular Material *411*
SECTION 6.67MAC - Subbase Course, Milled Asphaltic Concrete Aggregate *416*
SECTION 6.68 - Plastic Filter Fabric *418*
SECTION 6.69 (VACANT) *419*
SECTION 6.70 - Maintenance and Protection of Traffic *419*
SECTIONS 6.71 AND 6.72 (VACANT) *439*
SECTION 6.73 - Removing, Furnishing and Installing Parking Meter Posts *439*
SECTION 6.74 - Steel Plate at Tree Wells *440*
SECTION 6.75 - Grinding Existing Asphaltic Concrete Wearing Course *442*
SECTIONS 6.76 THRU 6.81 (VACANT) *446*
SECTION 6.82 - Removing Existing Traffic and Street Name Signs and Sign Posts *446*
SECTION 6.83 - Furnishing and Installing Traffic Signs and Posts *447*
SECTION 6.84 – Lollipop Type Bus Stop Signs *455*
SECTION 6.85 - Traffic Enforcement Agents *456*
SECTION 6.86 - Furnishing and Installing Street Name Signs and Posts *457*
SECTION 6.87 - Plastic Barrels *462*
SECTIONS 6.88 THROUGH 6.90 (VACANT) *463*
SECTION 6.91 - Reflective Cracking Membrane (18" Wide) *463*
SECTIONS 6.92 THRU 6.93 (VACANT) *464*
SECTION 6.94 - Cast Iron Under-Sidewalk Drains *465*
SECTION 6.95 - Stabilization of Subgrade *466*
SECTIONS 6.96 AND 6.98 (VACANT) *468*
SECTION 6.99 - Audio/Video Documentation Survey *468*
SECTION 7.00 (VACANT) *470*
SECTION 7.01 - Subway Sidewalk Frames and Gratings *470*
SECTION 7.02 - Epoxy Mortar Repairs *472*
SECTION 7.03 (VACANT) *473*
SECTION 7.04 - Painting Handrailing *473*
SECTIONS 7.05 THRU 7.11 (VACANT) *474*
SECTION 7.12 - Soil Density Testing *474*
SECTION 7.13 - Maintenance of Site *477*
SECTION 7.14 (VACANT) *484*
SECTION 7.15 - Temporary Wooden Steps *484*
SECTION 7.16 - Test Pits *485*
SECTION 7.17 (VACANT) *488*
SECTION 7.18 - Controlled Low Strength Material (CLSM) *488*
SECTION 7.19 - Load Transfer Joint *491*
SECTION 7.20 - Reset Basement Access *492*
SECTION 7.21 (VACANT) *494*
SECTION 7.22 - Slope Protection *494*
SECTIONS 7.23 THRU 7.29 (VACANT) *496*
SECTION 7.30 - Removal of Tracks *496*
SECTION 7.31 - Demolition of Roadway Vaults and Truss Blocks *497*
SECTIONS 7.32 THRU 7.33 (VACANT) *498*
SECTION 7.34 - Tow Truck Service *499*
SECTION 7.35 (VACANT) *500*
SECTION 7.36 - Pedestrian Steel Barricades *500*
SECTIONS 7.37 AND 7.87 (VACANT) *501*
SECTION 7.88 - Rodent and Waterbug Pest Control *502*

SECTIONS 7.89 THRU 7.95 (VACANT) *506*
SECTION 7.96 - Anti-Graffiti Coating For Wall Surfaces *506*
SECTIONS 7.97 THRU 8.01 (VACANT) *510*
SECTION 8.02 – Special Modification of Work for Installation of New Curb and Sidewalks *511*
SECTIONS 8.03 THRU 8.06 (VACANT) *513*
SECTION 8.07 - Temporary Aluminum Pedestrian Bridge *514*
SECTION 8.08 - Variable Message Boards *515*
SECTION 8.09 (VACANT) *516*
SECTION 8.10 - Survey Monuments *516*
SECTION 8.11 (VACANT) *526*
SECTION 8.12 - Temporary Retaining Wall *526*
SECTIONS 8.13 THRU 8.21 (VACANT) *530*
SECTION 8.22 - Three Ply Membrane Waterproofing *530*
SECTIONS 8.23 THRU 8.99 (VACANT) *535*
SECTION 9.00 - Exploratory Test Pits *535*
SECTIONS 9.01 THRU 9.03 (VACANT) *536*
SECTION 9.04 - Allowance for Anti-freeze Additive in Concrete *537*
SECTIONS 9.05 THRU 9.29 (VACANT) *537*
SECTION 9.30 - Storm Water Pollution Prevention *537*
SECTIONS 9.31 THRU 9.94 (VACANT) *561*
SECTION 9.95 - Dimensioned Granite Masonry *561*
SECTIONS 9.96 THRU 9.98 (VACANT) *563*
SECTION 9.99 - Flashing Arrow Boards *563*

(NO TEXT ON THIS PAGE)

DIVISION VI - SUPPLEMENTAL CONSTRUCTION METHODS

(NO TEXT ON THIS PAGE)

DIVISION VI

SUPPLEMENTAL CONSTRUCTION METHODS

SECTION 6.01 - Clearing and Grubbing

6.01.1. INTENT. This section describes Clearing and Grubbing.

6.01.2. DESCRIPTION. Clearing and Grubbing shall include the removal and disposal of all fences, trees less than four (4") inches in diameter, branches, down timber, snags, brush and other vegetation, debris, tires, batteries, automobile parts, kitchen appliances, rubbish, stumps, roots and root systems, miscellaneous minor structures, and all other objectionable materials as noted on the Contract Drawings, from within areas shown on the Contract Drawings and where directed by the Engineer.

The Contractor must comply with all Federal, State, and City laws pursuant to the handling and disposal of woody organic material that is host material for the Asian Longhorned Beetle. All wood that is host material for the Asian Longhorned Beetle must be chipped, ground, or shredded inside the quarantine zone to a size of less than one inch (1") in at least two dimensions before it is permitted to leave the quarantine zone. Please refer to the attached 139 of the New York State Department of Agriculture and Markets law and contact State personnel for further details. See **Section 1.06.23.(R), PLANT PEST CONTROL REQUIREMENTS**, of the General Conditions, herein, for additional requirements.

6.01.3. DISPOSAL OF SALVABLE MATERIAL. Salvable fence, including all appurtenances, or other salvable materials shall be carefully dismantled, removed, cleaned and stored on the site for re-use in the work; delivered, after cleaning, to a designated City-owned Yard, or disposed of away from the site of the work, whichever the Engineer shall direct.

6.01.4. DISPOSAL OF NON-SALVABLE MATERIAL. Non-salvable materials shall be disposed of away from the site of the work. The disposal of materials resulting from Clearing and Grubbing operations by burning in open fires will not be permitted.

6.01.5. METHODS. In cut areas and in fill areas where the depth of fill is two foot six inches (2'-6") or less, all stumps, roots and root systems shall be removed to a depth of three (3') feet below the existing ground surface. In fill areas where the depth of fill varies between two foot six inches (2'-6") and three feet (3'-0"), stumps shall be cut to provide not less than two foot six inches (2'-6") of fill above the top of stumps. In this case, roots and root systems need not be removed, except as the Engineer shall deem necessary. In fill areas where depth of fill exceeds three feet (3'-0"), stumps shall be cut six (6") inches above the existing ground surface and roots and root systems shall not be removed.

(A) PRUNING

Branches of trees overhanging roadways, or other branches designated by the Engineer, shall be pruned to provide a clearance of fourteen (14') feet above the proposed final surface. Pruning cuts of one (1") inch or more in diameter shall be completely covered with an approved asphalt base paint suitable for use in tree surgery.

(B) PARKS DEPARTMENT APPROVAL

The Department of Parks and Recreation's prior approval of methods for felling, cutting or pruning trees shall be obtained for all trees which are under their jurisdiction.

(C) PROTECTION

Clearing and Grubbing operations shall be progressed in a manner and with equipment which will not damage trees, structures and adjoining grounds or vegetation which are to remain nor create any pedestrian or vehicular traffic hazards.

In addition, all clearing and grubbing operations under the drip line of existing trees shall be performed by hand methods lonely. Tree protection fences shall not be moved or removed without the written permission of the Engineer.

(D) FENCING

Approved protective fencing or barricades shall be furnished and erected around or adjacent to individual trees, groups of trees and structures which are to remain, and at other required locations, when and as directed by the Engineer.

(E) CLEAN UP

All materials resulting from Clearing and Grubbing operations shall be disposed of, as specified, and the site shall be left in a condition satisfactory to the Engineer.

(F) REMOVAL OF FENCING

Protective fencing and barricades shall be removed and disposed of away from the site when directed by the Engineer.

6.01.6. MEASUREMENT.

(A) PER LUMP SUM

Payment for Clearing and Grubbing will be made on a Lump Sum basis for work satisfactorily completed. Monthly payments will be made in proportion to the amount of work done as determined by the Engineer.

(B) PER ACRE

Payment for Clearing and Grubbing will be made at the unit price bid per acre computed to the nearest tenth acre, for work satisfactorily completed.

(C) PER SQUARE YARD

Payment for Clearing and Grubbing will be made at the unit price bid per square yard for work satisfactorily completed.

6.01.7. PRICES TO COVER. The contract prices for Clearing and Grubbing shall include the cost of all labor, materials, equipment, insurance, and incidentals required to complete the work, together with all other work in connection therewith and incidental thereto, in full compliance with the Contract Drawings, the specifications and the directions of the Engineer.

When there is no scheduled item provided therefor, the cost of the work required for Clearing and Grubbing shall be included in the prices bid for all the scheduled contract items.

No separate payment will be made for tree pruning required herein to provide a clearance of fourteen (14') feet above the proposed final surface.

Payment will be made under:

Item No.	Item	Pay Unit
6.01 AA	CLEARING AND GRUBBING	L.S.
6.01 AB	CLEARING AND GRUBBING	ACRE
6.01 AC	CLEARING AND GRUBBING	S.Y.

SECTION 6.02 - Unclassified Excavation

6.02.1. INTENT. This section describes Unclassified Excavation.

6.02.2. DESCRIPTION. Unclassified Excavation shall include the excavation, removal and disposal of all materials of whatever nature encountered (except for ledge rock, unanticipated structures which cannot be removed using conventional excavating equipment, and materials designated to be removed as contaminated or hazardous material) in areas of roadway to be repaved or widened, including pavements, foundations, curbs, sidewalks, and tree stumps; backfilling; grading; compacting and preparation of subgrades.

The location, general character and essential details shall be as specified and as shown on the Contract Drawings.

Not included under this section is excavation under other sections when necessary excavation is included in the work to be done under the other sections.

6.02.3. GENERAL REQUIREMENTS.

(A) DISPOSAL OF MATERIALS.

1. Excavated material that is suitable, in the opinion of the Engineer, shall be re-used, so far as practicable, in backfilling.

2. The disposal of materials removed hereunder shall comply with the applicable requirements of **Sections 1.06.47 and 1.06.48** in the General Conditions.

3. Tree stumps, indicated to be removed by the Contractor, shall be removed and disposed of, to the satisfaction of the Engineer, and pits shall be backfilled with acceptable materials.

4. The Contractor shall carefully remove, clean and store on the site all items interfering with construction which, in the opinion of the Engineer, are suitable for re-use in work to be done under other Sections. All items designated by the Engineer or shown on the Contract Drawings, to be salvaged but not re-used in the work shall be delivered by the Contractor to locations designated by the Engineer and shall be neatly stacked at such points as directed, except as otherwise specified.

5. Salvable items, delivered to designated locations, shall contain no loose earth, mortar, concrete, asphaltic surface material, rubbish, waste, debris or other undesirable materials. Granite block, brick and similar materials, having adherent joint materials which will not dislodge during transit, will be accepted for delivery.

6. Remaining items, not designated, ordered or shown to be salvaged for re-use at the site of the work or to be delivered by the Contractor to other locations, shall become the property of the Contractor and shall be removed from the site of the work at no additional cost to The City.

(B) UNSUITABLE MATERIAL

Any objectionable materials encountered in excavated areas (except for materials designated to be removed as contaminated or hazardous material) shall be properly disposed of away from the site by the Contractor at no additional cost to The City.

(C) EXPOSED STRUCTURES TO BE PROTECTED

All exposed sewers, manholes, receiving basins, water mains, and other structures shall be carefully protected. Any damage done to such structures shall be promptly repaired by the Contractor at no additional cost to The City.

6.02.4. CONSTRUCTION METHODS, UNCLASSIFIED EXCAVATION.

(A) EXCAVATION.

All excavations shall be carried to the required depths in such a manner as to produce an undisturbed subgrade.

1. Cutting existing sidewalks: When directed by the Engineer, sidewalks shall be removed to the nearest parallel joint in back of the new curb or to where designated. No concrete sidewalk shall be cut off or otherwise disturbed until the same has been examined by the Engineer.

2. Removal of existing pavement foundation: No existing concrete base for pavement shall be broken up or removed until test borings have been made and until it has been examined by the Engineer. Any concrete base for pavement so broken up or removed, except by direction of the Engineer, shall be replaced by the Contractor at his own expense.

   Where the existing pavement including the base is to be removed and then restored, the concrete shall be removed for a distance of six (6”) inches beyond the outside limits of the area of the subgrade disturbed and the pavement shall be removed for a distance of nine (9”) inches beyond the outside limits of the concrete removed for asphalt pavement and nine (9”) inches beyond for granite block.

   Where the existing pavement base is ordered to be retained, it shall be stripped of all existing wearing course, bed materials, binder or any other material of whatever nature encountered by approved means, and the concrete shall be left clean and ready to receive the new build-up leveling course or new wearing course, as required.

3. Excavation for curb limited: Where a new roadway pavement is to be constructed, all curb shall be set along the street prior to removal of any existing adjacent pavement or pavement foundation, except for a width of not more than three (3’) feet along the curb, except by special permission of the Engineer.

   At locations identified for recurbing only (where roadway pavement is not designated to be reconstructed), the removal of a width of not more than one (1’) feet of roadway pavement along the curb line will be permitted, and the cost thereof shall be included in the contract price bid for the appropriate curb item.

(B) GRADING AND COMPACTING

The Contractor shall clean the subgrade of all debris, foreign material and all other undesirable material designated by the Engineer. If the subgrade becomes muddy, rutted or displaced, due to any cause whatsoever, the Contractor shall regrade the area affected.

The subgrade for pavements, foundations and slabs shall be brought to line, slightly above the proposed grade, wetted and then rolled and compacted with an approved self-propelled roller weighing not less than ten (10) tons. Portions of the subgrade inaccessible to the roller shall be wetted and tamped or rolled with a smaller roller as may be directed by the Engineer.

All hollows and depressions, which develop under rolling, shall be filled with acceptable material and all high spots shall be removed and the area again rolled. This process of shaping, filling and compacting shall be repeated until no depressions develop and there is no movement of the material under the roller.

Where the filling necessary to bring the roadway to a uniform subgrade exceeds six (6") inches in depth, the fill shall be placed in maximum twelve (12") inch layers and rolled as above specified.

A minimum of 95 percent of Standard Proctor Maximum Density will be required after compaction of each lift.

(C) HAND EXCAVATION

Hand Excavation shall be limited to the extent required by the Contract Drawings, the Specifications and the directions of the Engineer, and shall not be paid for separately when said work is deemed to be included for payment under other contract items.

Hand excavation shall include excavation that requires a combination of intermittent probing or digging carefully done with hand labor using hand held tools only, alternating with machine excavating using mechanized earth moving equipment at locations where the hand probing or digging clearly indicates that machine excavating is permissible, where directed and approved by the Engineer.

(D) PUMPING, FLUMING

The Contractor shall at all times keep trenches and excavations free from water and do all necessary pumping and fluming.

(E) BRIDGING, DECKING, FENCING

The Contractor shall construct all required or ordered temporary timber bridging and decking for pedestrian and vehicular traffic. Steel plates shall be provided over excavations to conform with **Section 1.06.44.(E)**.

6.02.5. ROCK EXCAVATION. Rock excavation and measurement shall be in accordance with **Section 4.11**.

6.02.6. MEASUREMENT. The quantity of Unclassified Excavation, including widened areas, to be measured for payment, shall be the number of cubic yards of material of whatever nature encountered (except for ledge rock, unanticipated structures which cannot be removed using conventional excavating equipment, and hazardous materials), actually removed and disposed of, from the existing or proposed roadway area, between the existing surface of the roadway, or area to be widened, and the finished subgrade of the pavement base. When ordered by the Engineer, additional excavation outside the payment planes specified herein will be measured for payment hereunder.

The dismantling and removal of the existing street lights, traffic signals and fire alarms will be done by the various departments having jurisdiction, except as otherwise provided. The existing foundations for these

facilities shall be removed by the Contractor to a plane two (2') feet below subgrade and such removal will be measured for payment under Unclassified Excavation.

At street locations where curb is to be set to the lines of the widened roadway, the removal of all materials between the existing and proposed curb lines shall be measured for payment under Unclassified Excavation.

6.02.7. PRICES TO INCLUDE. The contract prices for Unclassified Excavation shall include the cost of all labor, materials, plant, equipment, insurance, and incidentals required for excavating and disposing of all materials of whatever nature encountered (except for ledge rock, unanticipated structures which cannot be removed using conventional excavating equipment, and hazardous materials), including pavements, foundations, curbs and sidewalks in areas to be widened; removal of trees; salvaging items designated for re-use in the work; delivery of salvaged materials to designated City yards, where not otherwise provided; grading; backfilling; compaction and preparation of subgrades; additional excavation, when ordered by the Engineer; all, together with necessary incidentals, in accordance with the Contract Drawings, the specifications and the directions of the Engineer.

When there is no provision for separate payment under Item Nos. 4.11 CA or 4.11 CB, the cost of furnishing and placing fill shall be included in the contract price for Unclassified Excavation.

The quantity of excavation to be measured for payment under Unclassified Excavation, shall not include excavation required under other Sections whose contract prices include the cost of excavation.

Payment will be made under:

Item No.	Item	Pay Unit
6.02 AAD	UNCLASSIFIED EXCAVATION (To be used when a quanitity of Suitable Excavated Material is required to be delivered to a City Yard)	C.Y.
6.02 AAN	UNCLASSIFIED EXCAVATION (To be used when Suitable Excavated Material is NOT required to be delivered to a City Yard)	C.Y.

SECTION 6.03 - Stripping of Pavement Surfaces

6.03.1. INTENT. This section describes the stripping of existing pavement surface materials and related work.

6.03.2. DESCRIPTION. Stripping of Pavement Surfaces shall include the removal and disposal of surface materials from existing concrete base for pavement, the cleaning of such base for pavement to receive new surfacing materials and the removal and disposal, when directed, of unsatisfactory existing concrete base for pavement.

6.03.3. EQUIPMENT. Material and equipment, used in stripping and removal operations shall be in satisfactory working condition.

6.03.4. METHODS.

(A) REMOVAL

The existing pavement surface, including binder, mortar bed, or any other materials of whatever nature encountered, regardless of thickness, shall be stripped from the foundation where directed. Care shall be taken not to damage the foundation or to extend the stripping beyond the limits designated.

The foundation shall be cleaned of all foreign matter and thoroughly broomed or flushed in a satisfactory manner.

Where directed, test holes shall be made by the Contractor to determine the quality and depth of foundation.

When directed, unsatisfactory existing concrete foundation or base for pavement, exposed by stripping operations, shall be removed to limits designated by the Engineer and disposed of away from the site. Concrete base, removed beyond the designated limits, shall be replaced at no additional cost to The City.

(B) DUST CONTROL

During the progress of the work, the Contractor shall carry on the work in such a manner as to prevent the creation of a dust nuisance to the local residents and general public.

At all times during the prosecution of the work, the Contractor shall employ such dust allaying materials or methods as will keep the dust nuisance at a minimum, to the satisfaction of the Engineer.

(C) DISPOSAL

Non-salvable stripped materials shall be disposed of by the Contractor outside the limits of the contract.

All the applicable provisions of **Subsection 6.02.3.(A)** shall be deemed included hereunder.

(D) DAMAGE BY THE CONTRACTOR

Concrete base for pavement, damaged as a result of stripping operations, shall be removed, disposed of and replaced, at no additional cost to The City.

Surface materials, stripped beyond the limits designated, shall be removed, disposed of and replaced by the Contractor at his own expense.

6.03.5. MEASUREMENT.

(A) STRIPPING OF PAVEMENT SURFACES

The quantity to be measured for payment shall be the number of square yards of surface materials stripped as specified.

(B) REMOVAL OF EXISTING BASE

Existing concrete base, removed in compliance with the provisions of **Section 6.03.4.(A)** hereof, will be measured and paid for under the scheduled item for Excavation at the contract price per cubic yard bid therefor.

(C) DEDUCTIONS FOR ROADWAY HEADS, ETC.

In determining the area of stripping and the area and volume of concrete base removed, the areas occupied by rails, bases of columns, manhole heads, gate boxes, road boxes and similar structures will

be deducted when they measure more than one (1) square foot and will not be deducted when they measure one (1) square foot or less.

6.03.6. PRICES TO COVER.

(A) The contract prices per square yard bid for Stripping of Pavement Surfaces of the several classes shall cover the cost of all labor, materials, equipment, insurance, and incidentals required to complete the work, together with necessary incidentals, in accordance with the Contract Drawings, the specifications and the directions of the Engineer.

(B) In addition, under Item 6.03 CA, the Contractor shall also be required to include the cost of disposal of blocks away from the work site.

(C) In addition, under Item 6.03 CC, the Contractor shall also be required to include the cost of delivering blocks to a designated City yard.

Payment will be made under:

Item No.	Item	Pay Unit
6.03 AA	STRIPPING PAVEMENT SURFACE (ASPHALTIC CONCRETE)	S.Y.
6.03 BA	STRIPPING PAVEMENT SURFACE (SHEET ASPHALT)	S.Y.
6.03 CA	STRIPPING PAVEMENT SURFACE (GRANITE BLOCK)	S.Y.
6.03 CC	STRIPPING PAVEMENT SURFACE (GRANITE BLOCK)(DEL. TO CITY YARD)	S.Y.

SECTION 6.04 – Granite Block Wearing Course

6.04.1. INTENT. This section describes the relaying of Granite Block Wearing Courses.

6.04.2. DESCRIPTION. Where directed by the Engineer, specified types of wearing courses shall be relaid to the grades shown on the Contract Drawings, specified or directed by the Engineer. All blocks shall be thoroughly cleaned before being relaid.

Any shortage in blocks due to laying or from any other cause shall be supplied and incorporated in the work by the Contractor at his expense.

6.04.3. MATERIALS. Materials shall comply with the following requirements:

Asphaltic Joint Filler--**Section 2.16**
Bitumen-sand Bed--**Section 3.02**
Cement-grout Joint Filler--**Section 3.06**, Type 2
Liquid Asphalt--**Section 2.03**, Grade RC-70
Emulsified Asphalt (for joint filler)--**Section 2.04**, Type RS-1
Mortar Bed and Mortar--**Sections 3.03 and 3.07**, Type 2
Preformed Expansion Joint Filler--**Section 2.15**, Type as specified
Sand--**Section 2.21**, Type 1A or 2A
Separating Agent--**Section 3.08**
Granite Block--**Section 2.06**, Types 1 or 2, except that no block shall be less than six (6") inches long, four (4") inches wide and five (5") inches deep.

Granite Block may be rejected by the Engineer for re-use in relaid wearing courses because of excessive roundness or other objectionable characteristics.

6.04.4. METHODS. The Company performing this work shall have installation of natural stone pavements represent a substantial proportion, if not a majority, of its regular work.

(A) PREPARATION OF SURFACE

Before operations begin, the concrete base shall be thoroughly set if freshly poured. The concrete base shall be swept and cleaned of all dirt, loose and foreign matter, and be free of standing water. No block shall be laid unless the surface on which it is to be laid is in a condition acceptable to the Engineer.

(B) SEPARATING AND HANDLING

Granite blocks from different quarries shall be delivered, piled and laid separately in different sections of the work, as required. They shall be handled with care to prevent the chipping and breaking of edges and corners.

(C) MORTAR UNDER TROLLEY CAR TRACKS

Where there are trolley car tracks in the street and they are not designated to be removed under other items, the spaces between the web of the rail and the block and directly under the car tracks shall be filled with a stiff mortar. The mortar shall be carefully struck so as not to project beyond a vertical plane through the edge of the rail head and shall be kept in position until the wearing course is laid.

(D) SPREADING AND SHAPING OF THE BED

The mortar bed shall be spread on the concrete base to a depth of one (1) to one and one-half (1-1/2") inches, be shaped by approved methods to a surface approximately parallel to and five (5") inches below the finished surface, and shall not be disturbed after shaping prior to the laying of the blocks.

(E) LAYING

Block shall be laid on the bed before it has set, in straight courses at right angles to the line of the street or at such other angles as may be directed, with top surfaces conforming to the crown of the street.

Blocks shall be laid as closely together as possible, in courses of uniform width, with joints broken by a lap of at least three (3") inches, and not more than twenty-five (25') feet in advance of the ramming. The maximum width of joint shall be one-half (1/2") inch as measured between the edges of the top surfaces of the blocks. The blocks shall be laid to guide blocks or head stones at such intervals as directed.

(F) RAMMING GRANITE BLOCK

Blocks shall have no sand or gravel placed in the joints and shall be rammed to a solid bearing with a rammer weighing not less than thirty (30) pounds handled by a skilled rammersman. Not less than one (1) rammersman shall be employed to three (3) pavers. Blocks that are found low shall be raised to a true and even surface by adding to the bed. Those found broken or otherwise unsatisfactory shall be removed by tongs and replaced by approved blocks. Pinch bars shall not be used in removing blocks.

(G) SEPARATING AGENT

When an asphaltic joint filler is specified in granite block wearing courses, upon completion of ramming of granite block and immediately prior to the application of the filler, the wearing course shall be swept clean and coated with a separating agent. The solution shall be applied to the surface of the pavement with care to prevent entrance into the joints. It may be applied by pressure sprayers, flexible rollers, brushes or other approved devices and the proportions of the solution may be varied within the specification limits to secure the proper consistency for the method of application used.

In addition to those agents described in **Section 3.08**, other approved agents may be used to remove excess joint filler.

(H) ASPHALTIC JOINT FILLER

Asphaltic joint filler shall be heated in suitable vessels equipped with approved calibrated thermometers and be satisfactorily agitated as required to maintain a uniform consistency. It shall have a temperature between 350 degrees F. and 450 degrees F. when applied. The filler shall be applied only when the joints are dry and clean and when the air temperature will permit the filler to flow freely into the joints. The filler shall be applied by means of either approved pouring pots applied directly into the joints or it may be flushed on the surface of the wearing course and worked into the joints by hot iron squeegees or other approved appliances as directed. If necessary, the joint shall be repoured until they remain permanently flush with the surface of the wearing course.

(I) REMOVING AND UTILIZING EXCESS ASPHALTIC JOINT FILLER IN GRANITE BLOCK WEARING COURSES

The asphaltic joint filler shall, after hardening, be removed from the wearing course by cutting in an approved manner, leaving the surface clean and free from bituminous matter. Filler may, after removal, be combined with fresh filler and the whole reheated and used.

(J) CEMENT-GROUT JOINT FILLER

The wearing course shall be sprinkled with clean water as directed. The cement-grout joint filler shall be flushed on the surface and worked into the joints with brooms, rubber edged squeegees or other approved appliances. The joints shall be repoured, if necessary, before initial set has taken place until they are filled flush with the surface of the wearing course.

The amount of filler left on the surface of the wearing course shall be as little as possible and all surplus filler shall be satisfactorily removed.

(K) SUFFICIENCY OF APPARATUS

The apparatus for heating and/or agitating the filler shall, in numbers and efficiency, be sufficient to permit the filler gang to closely follow the pavers or rammers, as the case may be, and in no case shall a wearing course be left overnight or when work is stopped without the joint filling being completed.

(L) JOINT FILLING IN COLD OR WET WEATHER

When air temperature is below 38 degrees F. in the shade, cement-grouting may be done only if permitted by the Engineer.

In case of rain, the wearing course shall be protected as required and in no case shall asphaltic filler be put into wet joints.

(M) TESTING SURFACE

After the wearing course has been laid, the surface shall be tested with an approved straight edge ten (10') feet long or with an approved surface testing machine laid parallel with the center line of the roadway and any irregularity in the alignment of granite block wearing courses, exclusive of depressions in individual blocks, exceeding one-half (1/2") inch shall be immediately corrected to the satisfaction of the Engineer.

(N) TRAFFIC

No traffic of any kind will be allowed on the wearing course until permitted by the Engineer.

(O) DEFECTIVE WEARING COURSE

Such portions of the completed wearing courses as are defective in finish, compression, composition, or that do not comply with the requirements of these specifications, shall be taken up, removed and replaced with suitable materials, properly laid in accordance with these specifications.

(P) REMOVAL OF EXISTING CONCRETE BASE

Where directed by the Engineer, the Contractor shall break up, remove and dispose of the existing underlying concrete base. Payment will be made for this work under the appropriate item for Excavation. Replacement of the concrete base will be paid for under **Section 4.04, Concrete Base for Pavement**.

6.04.5. MEASUREMENT.

(A) The quantity to be measured for payment for

Item No. 6.04 BA - GRANITE BLOCK CLEANED; and,
Item No. 6.04 BB - FURNISH NEW GRANITE BLOCK PAVERS

shall be the number of blocks actually cleaned or furnished, as specified, to the satisfaction of the Engineer.

(B) The quantity to be measured for payment for

Item No. 6.04 BC - INSTALL GRANITE BLOCK PAVEMENT (NEW OR EXISTING);
Item No. 6.04 DA - FURNISH GRANITE SLAB PAVEMENT;
Item No. 6.04 DB - INSTALL GRANITE SLAB PAVEMENT;
Item No. 6.04 NGS - NEW GRANITE SLAB PAVEMENT; and,
Item No. 6.04 RGB - GRANITE BLOCK PAVEMENT RELAID

shall be the number of square yards of granite pavers or slabs actually installed, inplace, to the satisfaction of the Engineer. Generally the quantity of furnished pavers or slabs shall equal the quantity of installed pavers or slabs. In determining the area of pavers or slabs to be paid for, the areas occupied by rail heads, bases of columns, manhole heads, gate boxes, road boxes and similar structures will be deducted when their superficial areas measure more than one (1) square foot and will not be deducted when they measure one (1) square foot or less.

6.04.6. PRICES TO COVER.

(A) The contract prices per each for

Item No. 6.04 BA - GRANITE BLOCK CLEANED; and,
Item No. 6.04 BB - FURNISH NEW GRANITE BLOCK PAVERS

shall cover the cost of all labor, materials, equipment, insurance, and incidentals required to clean existing blocks and to furnish new blocks, all in accordance with the Contract Drawings, the specifications and the directions of the Engineer.

(B) The contract prices per square yard for

Item No. 6.04 BC - INSTALL GRANITE BLOCK PAVEMENT (NEW OR EXISTING);
Item No. 6.04 DA - FURNISH GRANITE SLAB PAVEMENT;
Item No. 6.04 DB - INSTALL GRANITE SLAB PAVEMENT;
Item No. 6.04 NGS - NEW GRANITE SLAB PAVEMENT; and,
Item No. 6.04 RGB - GRANITE BLOCK PAVEMENT RELAID

shall cover the cost of all labor, materials, equipment, insurance, and incidentals required to be furnished in the cleaning, dressing, redressing, and relaying of wearing courses, complete, in place, in full compliance with the Contract Drawings, the specifications and the directions of the Engineer, to furnish such samples for testing as may be required and to maintain the wearing courses in good condition as required **Section 5.05**.

Payment will be made under:

Item No.	Item	Pay Unit
6.04 BA	GRANITE BLOCK CLEANED	EACH
6.04 BB	FURNISH NEW GRANITE BLOCK PAVERS	EACH
6.04 BC	INSTALL GRANITE BLOCK PAVEMENT (NEW OR EXISTING)	S.Y.
6.04 DA	FURNISH GRANITE SLAB PAVEMENT	S.Y.
6.04 DB	INSTALL GRANITE SLAB PAVEMENT	S.Y.
6.04 NGS	NEW GRANITE SLAB PAVEMENT	S.Y.
6.04 RGB	GRANITE BLOCK PAVEMENT RELAID	S.Y.

SECTION 6.05 (VACANT)

SECTION 6.06 - Granite Block and Concrete Paver Sidewalk

6.06.1. INTENT. This section describes the construction of Granite Block Sidewalk and Concrete Paver Sidewalk, as specified.

6.06.2. DESCRIPTION.

(A) GRANITE BLOCK SIDEWALK

Granite Block Sidewalk shall consist of block furnished by the Contractor, salvaged block or block furnished by The City, laid or relaid on a sand cushion in required patterns, with sand or cement-grout joints.

(B) CONCRETE PAVER SIDEWALK

Concrete Paver Sidewalk shall consist of pavers furnished by the Contractor, laid on a sand cushion in required patterns, with sand or cement-grout joints.

6.06.3. MATERIALS.

(A) GRANITE BLOCKS

Granite block for use hereunder shall meet the requirements of **Section 2.06**, Grade 2, except that permissible tolerances in dimensions shall be as follows:

	Tolerance	
	Plus	Minus
Length	2-1/2”	1/2”
Width	1/2”	0”
Depth	1/4”	1/4”

(B) CONCRETE PAVERS

Concrete pavers shall be “Appian” size, eleven and three-quarter (11-3/4”) inches in length by five and seven-eights (5-7/8”) inches in width by four (4”) inches in depth; “Medium Gray” in color with a natural finish, 8,000 psi concrete, as manufactured by: Hanover Architectural Products, Inc., Hanover, Pennsylvania, (800) 426-4242; Hastings Pavement Co., Inc. of Freeport, New York, (800) 874-4717; Nicolock of Long Island, New York, (516) 669-0700; or an approved equivalent. All blocks shall be uniform in size, color and finish.

(C) SAND

Sand for sand cushion and joint filler shall consist of clean, hard, durable uncoated stone particles free from lumps of clay and all deleterious substances and shall be so graded that when dry, one hundred percent (100%) shall pass a 1/4” square opening sieve; not more than thirty-five percent (35%) by weight shall pass a No. 50 sieve. Cushion sand may be rejected if it contains more than ten percent (10%) by weight of loam and/or silt.

(D) CEMENT-GROUT

Cement-grout shall meet the requirements of **Section 3.06**, Type 2.

6.06.4. METHODS.

(A) INSTALLING SAND CUSHION

The subgrade shall be compacted to the satisfaction of the Engineer. A sand cushion of a minimum thickness of one (1”) inch shall be placed over the subgrade. The sand cushion shall be compacted by being rolled with a roller weighing one hundred and fifty (150) pounds per foot of width, or by tamping as directed by the Engineer. Before being rolled, the sand cushion shall be brought to the proper elevation and grade as shown on the Contract Drawings, by a template of a shape and size satisfactory to the Engineer. After being rolled, all irregularities of the surface shall be eliminated and the sand cushion shall be brought to the exact form and section by the use of lutes or hand templates.

(B) CLEANING BLOCKS FOR RELAYING

Granite blocks shall be cleaned of all adherent materials by the Contractor to the satisfaction of the Engineer before incorporation into the work.

(C) LAYING BLOCKS

Blocks shall be carefully laid on the sand cushion according to the patterns shown on the Contract Drawings or as directed by the Engineer and shall be rammed solidly in position. Blocks to be relaid shall be approximately 4” x 5” x 8” and shall be laid with the better 4” x 8” surface showing. Joints between blocks shall be approximately one inch in width. Joints in adjacent courses shall be staggered, except where otherwise specified, shown on the Contract Drawings, or directed by the Engineer. All blocks shall be clean when placed in the work. Blocks, which in the opinion of the Engineer are not satisfactorily clean, shall be well washed before being placed. Cutting of blocks to meet the pattern requirement will be permitted, subject to the approval of the Engineer.

After a sufficient area of granite blocks has been laid, the surfaces shall be tested with a ten foot straight edge laid parallel with the center line and any depression exceeding one-quarter (1/4”) inch shall be

corrected and brought to the proper grade. All stones disturbed in making replacements or correcting depressions shall be settled into place by carefully ramming or tamping to grade by the use of hand tamper.

Each section of sidewalk must be acceptable to the Engineer before the joints in that section are filled.

(D) JOINT FILLER

Where sand joints are called for, the joints shall be filled with cushion sand firmly packed between blocks. Immediately after joints are filled, the sidewalk surface shall be swept clean of excess sand.

Where cement-grout joints are called for, the joints shall be completely filled with a grout mixture of one (1) part Portland cement and two (2) parts sand.

6.06.5. GRANITE BLOCK FURNISHED BY THE CITY. The Contractor shall pick up granite block to be used in the work at designated City yards, haul and deliver the block to the site of the work, clean the block to the satisfaction of the Engineer and incorporate the said block into the work in full compliance with the specifications and the directions of the Engineer.

6.06.6. MAINTENANCE. The Contractor shall maintain all granite block sidewalk and all concrete paver sidewalk in accordance with the provisions of **Section 5.05**, to the satisfaction of the Engineer.

The Contractor shall replace, according to the original specifications, any defective granite block or concrete paver sidewalk, prior to the expiration date of the guarantee period.

6.06.7. MEASUREMENT. The quantity of granite block sidewalk or concrete block sidewalk to be measured for payment shall be the number of square yards of each type and class placed to the lines, grades and patterns shown on the Contract Drawings, specified or directed, measured in place in final position.

6.06.8. PRICES TO COVER.

(A) GRANITE BLOCK SIDEWALK (CONTRACTOR FURNISH BLOCK)

The contract price per square yard for Granite Block Sidewalk (Furnish Block) with Sand and/or Grouted Joints shall cover the cost of furnishing all labor, materials, plant, equipment, insurance, and incidentals required to lay and/or relay such sidewalk on a sand cushion with sand and/or cement-grout joints and shall include the furnishing of new blocks to the site; furnishing additional blocks as replacements for blocks which are broken or damaged as a result of the Contractor's operations; cleaning, redressing, cutting and incorporating block into the work; furnishing and placing sand for sand cushion and sand joints; and maintaining the sidewalk in conformity with **Section 5.05**; all, together with necessary incidentals, as required, in full compliance with the Contract Drawings, the specifications and the directions of the Engineer.

(B) CONCRETE PAVER SIDEWALK (CONTRACTOR FURNISH PAVER)

The contract price per square yard for Concrete Paver Sidewalk (Furnish Paver) with Sand and/or Grouted Joints shall cover the cost of furnishing all labor, materials, plant, equipment, insurance, and incidentals required to lay such sidewalk on a sand cushion with sand and/or cement-grout joints and shall include the furnishing of new pavers to the site; furnishing additional pavers as replacements for pavers which are broken or damaged as a result of the Contractor's operations; cleaning, redressing, cutting and incorporating pavers into the work; furnishing and placing sand for sand cushion and sand joints; and maintaining the sidewalk in conformity with **Section 5.05**; all, together with necessary incidentals, as required, in full compliance with the Contract Drawings, the specifications and the directions of the Engineer.

(C) GRANITE BLOCK SIDEWALK (SALVAGED BLOCK)

The contract price per square yard for Granite Block Sidewalk (Salvaged Block) with Sand and/or Grouted Joints shall cover the cost of furnishing all labor, materials, plant, equipment, insurance, and incidentals required to lay and/or relay such sidewalk on a sand cushion with sand and/or cement-grout joints and shall include the removal and salvaging of existing block; furnishing additional block as replacements for block which are broken or damaged as a result of the Contractor's operations; cleaning, redressing, cutting and incorporating block into the work; furnishing and placing sand for sand cushion and sand joints; and maintaining the sidewalk in conformity with **Section 5.05**; all, together with necessary incidentals, as required, in full compliance with the Contract Drawings, the specifications and the directions of the Engineer.

(D) GRANITE BLOCK SIDEWALK (CITY FURNISHED BLOCK)

The contract price per square yard for Granite Block Sidewalk (City Furnished Block) with Sand and/or Grouted Joints shall cover the cost of furnishing all labor, materials, plant, equipment, insurance, and incidentals required to lay and/or relay such sidewalk on a sand cushion with sand and/or cement-grout joints and shall include the removal and salvaging of existing block; furnishing additional block as replacements for block which are broken or damaged as a result of the Contractor's operations; hauling block to the site of the work from designated City yards; cleaning, redressing, cutting and incorporating block into the work; furnishing and placing sand for sand cushion and sand joints; and maintaining the sidewalk in conformity with **Section 5.05**; all, together with necessary incidentals, as required, in full compliance with the Contract Drawings, the specifications and the directions of the Engineer.

Payment will be made under:

Item No.	Item	Pay Unit
6.06 AA	GRANITE BLOCK SIDEWALK (SAND JOINTS)(FURNISH BLOCK)	S.Y.
6.06 AB	GRANITE BLOCK SIDEWALK (GROUTED JOINTS)(FURNISH BLOCK)	S.Y.
6.06 AC	GRANITE BLOCK SIDEWALK (SAND AND GROUTED JOINTS) (FURNISH BLOCK)	S.Y.
6.06 BA	GRANITE BLOCK SIDEWALK (SAND JOINTS)(SALVAGED BLOCK)	S.Y.
6.06 BB	GRANITE BLOCK SIDEWALK (GROUTED JOINTS) (SALVAGED BLOCK)	S.Y.
6.06 BC	GRANITE BLOCK SIDEWALK (SAND AND GROUTED JOINTS) (SALVAGED BLOCK)	S.Y.
6.06 CA	GRANITE BLOCK SIDEWALK (SAND JOINTS)(CITY FURNISHED BLOCK)	S.Y.
6.06 CB	GRANITE BLOCK SIDEWALK (GROUTED JOINTS)(CITY FURNISHED BLOCK)	S.Y.
6.06 CC	GRANITE BLOCK SIDEWALK (SAND AND GROUTED JOINTS) (CITY FURNISHED BLOCK)	S.Y.
6.06 PA	CONCRETE PAVER SIDEWALK (SAND JOINTS)(FURNISH PAVER)	S.Y.
6.06 PB	CONCRETE PAVER SIDEWALK (GROUTED JOINTS)(FURNISH PAVER)	S.Y.
6.06 PC	CONCRETE PAVER SIDEWALK (SAND & GROUTED JOINTS) (FURNISH PAVER)	S.Y.

SECTION 6.07 - Bluestone Flags

6.07.1. INTENT. This section describes the removing, cutting, and relaying of existing bluestone flags; the furnishing and laying of new bluestone flags; and the removing and delivering to a City yard of existing bluestone flags. Where existing bluestone slabs are designated to be relaid, it is the intent of this

section to preserve as much of the existing bluestone flags as possible and re-establish their original hand-tight joint patterns. This shall be accomplished by relaying the existing bluestone flags and to furnish new bluestone flags, which match the existing, only as need to replace missing or existing damaged flags. Unless otherwise directed or shown on the Contract Drawings, this work shall be limited to replacement or resetting of sidewalk flags at designated locations within Historic Landmark areas which present potential hazards to users or which do not maintain the historic pattern, and not for replacement of entire block face(s) and/or entire property frontage(s).

6.07.2. DESCRIPTION. Relaid flags shall consist of existing in place bluestone flags which are to be removed, cleaned, cut, dress and relaid where directed.

New flags shall consist of bluestone flags furnished when there are insufficient existing flags available for relaying to complete the work and are to be laid where directed.

Flags removed and delivered shall consist of existing bluestone flags, in place, which are to be removed and delivered to a designated City yard when there is an excess of existing flags after completion of work.

At corner quadrants, only those stone slabs which exist outside the pedestrian ramps, or outside the ramp side slopes and transition areas, shall be subject to relaying, unless otherwise directed by the Engineer. Any badly damaged flags or flags that are otherwise inappropriate for reuse, as determined by the Engineer, shall not be relaid.

6.07.3. MATERIALS.

(A) BLUESTONE FLAGS. Bluestone flags shall conform to the requirements of **Section 2.31**.

Bluestone filler pieces ("Dutchmen Pieces") shall be used to facilitate relaying of existing bluestone flags which may have portions missing. Deteriorated existing bluestone flags shall be the first source of filler pieces; where this is not possible, new bluestone shall be used.

(B) BASE MATERIAL. Base material shall consist of limestone or traprock screenings, consisting of hard, durable, sharp-edged fragments, free from any deleterious matter, with 100% passing a 1/2" square-opening screen, 20% to 40% passing a No. 20 mesh sieve, and 5% to 15% passing a No. 200 mesh sieve. No recycled screenings will be accepted.

(C) SETTING BED. Setting bed shall be a minimum one (1") inch thickness consisting of one (1) part Portland cement and seven (7) parts clean sand. Portland cement shall comply with the requirements of ASTM Designation C 150, for Type II or IIA cement. Sand shall meet the applicable requirements of **Section 2.21**, for Type 1A sand.

(D) JOINT MATERIAL. Joint material between Bluestone Flags is to be pigmented cement-grout in accordance with requirements of **Section 3.06**, Type 2. Color is to match the adjacent flags and shall be based on samples previously approved.

(E) MATERIAL AROUND STREET HARDWARE (METAL). The material around street hardware (metal) shall be a caulking type silicone sealant compound approved by the Engineer, installed in accordance with the manufacturer's requirements. Color is to match adjacent flags as approved by the Engineer.

6.07.4. METHODS.

(A) GENERAL

No flag shall be removed from its bed, cut, or otherwise disturbed until examined and directed by the Engineer. Where the Engineer determines that the defective flag consists of only chipped or broken corners, not more than two (2) square inches in area, it shall be left in place and repaired with a

pigmented epoxy mortar under Item 7.02. The admixture used to pigment the epoxy mortar shall comply with the requirements of **Section 2.19** and shall be of color and quantity necessary to obtain a match of the epoxy mortar with that of the existing bluestone, to the satisfaction of the Engineer. However, no additional payment will be made for the cost of pigmenting the epoxy mortar.

Prior to any work, the Contractor shall submit Shop Drawings to the Engineer for approval. These Shop Drawings shall show in detail the entire proposed bluestone pattern, with all joint lines and dimensions of each individual flag shown, within each block where bluestone flags are designated to be relaid or laid. Drawings are to clearly show which existing flags are to be relaid in their existing position, or relaid elsewhere, which flags are to be resized and relaid, and which flags are to be new bluestone furnished and laid. All street hardware to remain shall be shown with dimensioned cut-outs in the bluestone. Filler pieces ("Dutchmen") where required are to be shown. Also, a detailed representative slab showing all proposed cuts and finishes as well as all other pertinent information shall be shown.

Any damage to a flag, resulting from the Contractor's operations, shall be made good by the Contractor, as directed by the Engineer, at no additional cost to The City.

The quality of workmanship shall be of a superior quality suitable for historical restoration. The Company performing this work shall have installation of natural stone pavements represent a substantial proportion, if not a majority, of its regular work.

(B) REMOVAL OF EXISTING SIDEWALK

The Contractor may not remove any existing bluestone from the site unless specifically approved by the Engineer. All other sidewalk materials (concrete, asphalt, dirt, etc.) shall be excavated and disposed of away from the site, as necessary to install bluestone flags.

Prior to removal of flags, the Contractor shall sawcut the existing joint lines between existing bluestone flags, as required, unless otherwise permitted. Flags to be relaid shall be carefully lifted by barring under an exposed edge or by other approved methods and, after removal, shall be stacked or stored on the site until such time as they are to be relaid at locations designated by the Engineer. Barring at joints will not be permitted. Subsequent to the initial lifting by barring, all contact with the flag is to be by hand.

All existing bluestone flags that are exposed, lifted or removed are to be inspected by the Engineer. The Engineer, in consultation with the Landmarks Preservation Commission, will make the final determination as to the suitability of existing bluestone flags for reuse.

Any damage to existing bluestone flags resulting from the Contractor's operations shall be corrected or replaced by the Contractor to the satisfaction of the Engineer at no additional cost to the City.

(C) FURNISHING AND PLACING BASE MATERIAL

The Contractor shall be required to furnish and place a four inch (4") base layer of screenings on compacted subgrade, prior to laying flags. However, where the existing base material is deemed acceptable by the Engineer, the Contractor may elect to leave that material in place. Should additional bedding material be required, Contractor shall furnish and place that additional material at no additional cost.

After spreading, the screenings must be saturated with water and compacted to the satisfaction of the Engineer.

For any portion of the four inch (4") base not furnished and placed by the Contractor, the City will take a credit of ten dollars ($10.00) per cubic yard.

(D) FLAGS RELAID

Prior to relaying existing bluestone flags, the Contractor is to perform all work associated with adjusting street hardware.

Existing flags that are to be relaid in specific patterns and broken flags that can be salvaged for re-use in the work shall be resized, by sawcutting as directed, and dressed so that joints will be square with the upper surface and free from feather edges, drill marks and tool marks. Size of relaid flag shall be not less than two (2') feet wide, not less than five (5) square feet in area, and of the thickness specified above for new flags.

Cut-outs for street hardware shall be entirely within one flag, i.e. not to straddle a joint line, with a minimum of six inches of slab (bluestone) completely around any cut-out, unless otherwise approved by the Engineer.

A setting bed mixture of one (1) part Portland cement to seven (7) parts sand shall be placed over the base material. Then immediately prior to the laying of each flag, the setting bed mixture shall be sufficiently wetted, as approved by the Engineer, and the flag firmly and evenly bedded to the required grade and pitch and brought to an even surface across joints. Then that flag shall be lifted to verify that full contact is made with the setting bed and any gaps shall be filled with additional wet bedding mixture, as may be required. Joints shall be hand tight, unless otherwise directed.

Flags shall be relaid in the specific patterns approved by the Engineer. Broken flags which can be salvaged for re-use in the work may be resized, by sawcutting as directed, and dressed so that joints will be square with the upper surface and free from feather edges, drill marks and tool marks.

Every effort is to be made to retain the existing bluestone flags. Accordingly, minor blemishes in existing bluestone are to be treated by accepted stone work procedures as directed by the Engineer, in consultation with the Landmarks Preservation Commission. Also, to retain existing bluestone, the Engineer may permit utilizing resized pieces smaller than specified herein.

Existing flags are to be thoroughly cleaned using a non-toxic detergent steam-clean wash and thorough rinse with water, prior to relaying.

(E) NEW FLAGS

New Flags shall be bedded and jointed as specified above for flags relaid.

(F) JOINTS AND PATCHES

Joints shall be hand tight. After setting flags, the setting bed mixture shall be brushed into the joints. Irregularities in flag size of old flags or adjacent curbs or walls may result in some larger joints. These joints are to be pointed for the full depth with mortar pigmented with bluestone dust to match the bluestone color. In order to salvage larger, historic flags which have spalled, small amounts of cementitious patching may be undertaken, as directed by the Engineer, using a mixture incorporating bluestone dust to match the existing stone. Where historic flags that are reset have an irregular surface that would create a trip hazard at the joint, the joint may be ground down to produce a level surface, only as directed by the Engineer. However, every effort shall be made to reset flags so that grinding is not necessary.

After setting flags, the surfaces of flags shall be cleaned of excess joint material and water applied to saturate the joints, all to the satisfaction of the Engineer.

(G) FLAGS REMOVED AND DELIVERED

Where directed the Contractor shall carefully remove existing flags as specified above for flags relaid, and shall deliver them to a designated City yard and stack them as directed by the Engineer.

6.07.5. MEASUREMENT. The quantity to be measured for payment hereunder shall be the number of square feet of surface area of existing bluestone flags relaid and new bluestone flags laid, complete, in place, and existing bluestone flags, in place, removed and delivered to a City yard. No deduction will be made for joints or areas occupied by heads, castings or other structures which are less than one (1) square foot. Areas occupied by the above structures which equal or exceed one (1) square foot will be deducted.

Existing defective flags that have been repaired in place with a pigmented epoxy mortar under Item 7.02, as directed by the Engineer, will not be measured for payment under this Section.

New bluestone flags furnished and laid as a replacement for flags broken, due to the Contractor's operations, will not be measured for payment.

6.07.6. PRICES TO COVER. The contract price per square foot of Existing Bluestone Flags Relaid, New Bluestone Flags Furnished and Laid, and Existing Bluestone Flags Removed and Delivered to a City Yard, shall cover the cost of furnishing all labor, materials, plant, equipment, insurance, and incidentals required to furnish shop drawings; lift, remove, salvage, stack, store, sawcut, fit, resize, dress, and perform all other work as may be required; clean existing flags to be relaid; furnish and place base and setting bedding; make necessary cut outs in bluestone flags; perform all sawcutting operations; provide filler pieces, as necessary; provide joints as required; perform a final cleaning of slabs; and maintain the completed work in compliance with the provision of **Section 5.05**; all, together with necessary incidentals, in accordance with the Contract Drawings, the specifications and the directions of the Engineer.

At corner quadrants, pedestrian ramps and their ramp side slopes and transition areas, shall be furnished and placed under Item 4.13 BBS, unless otherwise directed by the Engineer.

Payment will be made under:

Item No.	Item	Pay Unit
6.07 AA	EXISTING BLUESTONE FLAGS RELAID	S.F.
6.07 AB	NEW BLUESTONE FLAGS FURNISHED & LAID	S.F.
6.07 AC	EXISTING BLUESTONE FLAGS REMOVED & DELIVERED TO CITY YARD	S.F.

SECTION 6.08 - Concrete Curb, Re-used Steel Facing

6.08.1. INTENT. This section describes the construction of steel faced concrete curb using steel facing salvaged at the site or steel facing furnished by The City.

6.08.2. DESCRIPTION, MATERIALS AND METHODS. Description, materials and methods shall comply with the requirements of **Subsection 4.09.2**. through **Subsection 4.09.4.(L)**, inclusive.

6.08.3. ADDITIONAL REQUIREMENTS.

(A) GENERAL

Salvaged steel facing and steel facing furnished by The City shall be cleaned and painted as specified under **Subsection 2.13.4**.

Facing shall be bent or rebent to a true line and set to the proper grade without springing or wedging. The ends of corner facing, after setting, shall be welded on the back for its full depth to the adjacent straight steel facing to secure a joint equivalent to one hundred (100) percent strength of the material.

When shown or ordered, the Contractor shall install curb sleeve ties or clips for fastening ends of corner facing to adjacent straight facing in lieu of the welding specified above.

All the provisions of **Subsection 4.09.4**. shall apply to the work to be done hereunder.

(B) FACING FURNISHED BY THE CITY

The steel facing, furnished by The City, is stored at the several City Yards. The Contractor shall load such facing at the City Yard, haul the said facing to the site of the work and incorporate the facing into the work, at locations shown on the Contract Drawings or designated by the Engineer.

6.08.4. MEASUREMENT AND PRICE TO COVER.

(A) Concrete curb under

Item No. 6.08 AA - RESET STEEL FACED CONCRETE CURB (18" DEEP);
Item No. 6.08 AJ - RESET STEEL FACED CONCRETE CURB (27" DEEP); and,
Item No. 6.08 BA – RESET STEEL FACED CONCRETE CURB

shall be constructed with steel facing salvaged at job site, shall be measured and paid for in accordance with the provisions of **Subsection 4.09.5.** and **Subsection 4.09.6.**, inclusive.

Payment will be made under:

Item No.	Item	Pay Unit
6.08 AA	RESET STEEL FACED CONCRETE CURB (18" DEEP)	L.F.
6.08 AJ	RESET STEEL FACED CONCRETE CURB (27" DEEP)	L.F.
6.08 BA	RESET STEEL FACED CONCRETE CURB	L.F.

SECTION 6.09 - Concrete Headers

6.09.1. INTENT. This section describes the construction of Concrete Headers.

6.09.2. DESCRIPTION. Concrete Headers shall be rectangular in shape, six (6") inches wide and fifteen (15") inches deep.

Concrete headers shall be constructed to the lines and grades shown on the Contract Drawings.

6.09.3. MATERIALS. Concrete for headers shall comply with the requirements of **Section 3.05**, Class B-32, Type IIA.

Coarse aggregate shall be broken stone or gravel and comply with the requirements of **Section 2.02**, Type 1, Grade B, Size No. 57, or Type 2.

Fine aggregate shall comply with the requirements of **Section 2.21**, Type 1A, except that 5 to 30 percent shall pass a No. 50 sieve.

6.09.4. METHODS.

(A) EXCAVATION

Excavation shall be made to dimensions sufficient to permit the setting of forms.

(B) UNDERLYING MATERIALS

The material underlying concrete headers shall be satisfactory and thoroughly compacted. If unsatisfactory, the unsuitable material shall be removed and replaced with acceptable material and be thoroughly compacted.

(C) FORMS

Forms shall be either of metal of sufficient thickness but not less than one-eighth (1/8") inch to satisfactorily resist distortion when fastened together and secured in place, or be of acceptable planed and matched lumber of sufficient thickness to resist distortion, rigidly held in position and of such construction that a smooth surface will be provided. Forms shall be of a depth of not less than that of the header, be properly located with tops at grade and be left in place until the concrete has hardened.

(D) WORKMANSHIP

Concrete header shall be built as a continuous header across the pavement, without intermediate joints, unless otherwise specified and shall have smooth, plane ends. Concrete shall be tamped and aggregate shall be carefully spaded away from the front forms.

(E) SURFACE FINISH

The top of the header shall be finished by wood floating.

(F) BACKFILLING

Backfilling shall follow the removal of the forms as soon as practicable and shall be of clean earth or other approved material, satisfactorily compacted.

(G) PROTECTION AND CURING

Concrete headers shall be carefully protected against injury from rain, frost, the drying effects of the sun and wind, traffic or other causes, by means of suitable guards and covering.

Curing shall be done in accordance with the requirements of **Section 2.14**, Type 4, except when the Engineer orders the use of Type 1-D.

The sum of one (1) dollar will be deducted from any moneys due to the Contractor, under the contract, for each linear foot of concrete header which he fails to cure as required.

6.09.5. MEASUREMENT. The quantity to be measured for payment hereunder shall be the number of linear feet of concrete header constructed, complete, in place, measured along the center line of the header.

Payment for concrete header will be adjusted in accordance with the strength provisions of **Section 5.04**.

6.09.6. PRICE TO COVER. The contract price per linear foot of concrete header shall cover the cost of furnishing all labor, materials, plant, equipment, insurance, and incidentals required to construct concrete header, complete, in place, and shall include excavation (except rock excavation), backfilling and all necessary incidentals, furnishing such samples for testing as may be required and maintaining the

concrete header in good condition as required in **Section 5.05**, all, in full compliance with the Contract Drawings, the specifications and directions of the Engineer.

Payment will be made under:

Item No.	Item	Pay Unit
6.09	CONCRETE HEADER	L.F.
6.09 A	CONCRETE HEADER (8" WIDE X 10" DEEP)	L.F.
6.09 B	CONCRETE HEADER (12" WIDE X 24" DEEP)	L.F.

SECTIONS 6.10 THRU 6.17 (VACANT)

SECTION 6.18 - Picket Fence

6.18.1. DESCRIPTION. Under this Section, the Contractor shall furnish and erect Picket Fence of the type and size shown on the Contract Drawings, in accordance with the Specifications and directions of the Engineer.

6.18.2. MATERIALS. Fences and gates shall be constructed of bars, posts, rails and braces, of the sizes shown on the Contract Drawings.

All material shall conform to Specification C1015 of the American Iron and Steel Institute (A.I.S.I), unless otherwise specified.

Padlock. Where gates are specified, the Contractor shall be required to furnish one (1) padlock for each single gate and each leaf of a double leaf gate. All padlock shall be keyed alike with a master key, with two (2) inch width by three-quarter (3/4) inch thick brass body, maximum security, five (5) pin tumblers with hardened alloy steel chrome plated shackle no less than three-eights (3/8) inch diameter and two (2) inches clearance (elongated shackle). A galvanized steel chain, nine (9) inches long shall be fastened to the gate and the body of the lock. The chain shall be five-sixteenths (5/16) inch by one and three-eights (1-3/8) inch. The Contractor shall furnish two (2) keys for each padlock.

6.18.3. FABRICATION. No fabrication work is to be performed until shop drawings are approved by the Engineer.

Fences, complete with gates where required, shall be fabricated in strict accordance with Contract Drawings and shop drawings. Posts and rails shall be formed into panels of the shapes shown on the Contract Drawings and joints completely welded with welds of proper size and shape, riveted or bolted all as directed or shown on the Contract Drawings. All welds shall be ground smooth to a neat finish. Connections shall be provided as indicated on the Contract Drawings. Welds and weldments shall conform to the requirements of the American Welding Society.

Posts, braces and pickets shall in all cases be truly vertical; rails and bars shall be parallel to grade as shown on the Contract Drawings. Panels shall be curved as required by the work.

6.18.4. GALVANIZATION AND POWERE COATING. All components of the fencing including the casting, angle iron frames, posts, and rails shall be hot dipped galvanized in accordance with the provisions of the NYS DOT Standard Specifications. All galvanized surfaces will be given thermo-setting polyester powder finish for extra protection and added aesthetic appeal. The coating shall be lead free and without solvents. The final color shall be black as approved by the Engineer, unless otherwise shown on the Contract Drawings.

The Powder Coating Process:

The Powder coating process shall consist of the following steps unless directed otherwise by the Engineer:

- The material shall be suspended on Transport Beams
- The material shall be alkaline cleaned and then rinsed
- The material shall be pickled in a bath with inhibited phosphoric acid and then rinsed.
- An active anti-corrosive layer of zinc phosphate shall be applied and rinsed
- The layer of zinc phosphate shall be sealed with a hexavalent chromating agent of very low weight and then the material shall be rinsed.
- The material shall be rinsed with e-ionized water to remove any remaining salts which can cause osmosis.
- The material shall be dried in the drying oven
- The powder shall be charged to 80,000 volts and then sprayed onto the grounded steel
- The material shall be heated to a temperature between 340°-390° F, in accordance with the powder manufacturer's specifications, to melt the resin cores and to form a smooth homogeneous coating.
- The final product shall be inspected and tested by NYSDOT designated inspectors.

The approved product shall be carefully packed to prevent damages during shipping and unapproved product shall be removed at the Contractor's expense.

6.18.5. ERECTION. The fences shall be erected in holes which shall have been formed in the concrete or stone to receive them. After the posts have been set in place and properly supported to hold them to line and grade, the annular space shall be filled to the depth shown on the Contract Drawings with grout composed of one part Portland cement to two (2) parts sand. After grout has hardened, the remaining space shall be filled with an epoxy sealer filler as approved by the Engineer. The sealer shall be applied in strict accordance with the manufacturer's instructions, and shall be tooled in to fill and seal hole and form a one-quarter (1/4) inch wash away from the post. Concrete for individual post footing shall be Class B-32.

Any fence not set plumb and true to line and grade shall be removed and replaced at the Contractor's expense. The Contractor shall maintain the fences and gates during the life of the Contract and shall repair and replace all members that are disturbed, damaged or destroyed.

6.18.6. SAMPLES. Prior to fabrication of the fence, the Contractor shall submit, for approval of the Engineer, finished samples of parts of fences. The workmanship and finish of the fences shall be equivalent to the approved samples.

6.18.7. REMOVAL OF EXISTING PICKET FENCE. At the required location, the Contractor shall carefully remove existing picket fence between the limits shown on the Contract Drawings or directed by the Engineer, and demolish its foundation wall and/or footing to at least two (2) feet below grade. The Contractor shall then fill the area with compacted clean sand to the subgrade of the new sidewalk.

All fence elements removed shall be delivered to the property owners for their re-use, unless otherwise directed in writing by the Engineer and the property owner. All other materials removed during the removal of the fence and the demolition of the foundation wall shall be disposed of away from the site by the Contractor.

Care shall be exercised by the Contractor in the removal of the fence. Any damage caused by the Contractor's operations shall be repaired or replaced in kind, to the satisfaction of the Engineer, at the expense of the Contractor.

6.18.8. MEASUREMENT.

(A) PICKET FENCE. The quantity of Picket Fence to be paid for shall be the number of linear feet of each type fence furnished and erected complete, to the satisfaction of the Engineer. Measurement shall be made in place along the centerline of the top rail, from center to center of end posts.

(B) PICKET FENCE REMOVED. The quantity of Picket Fence Removed to be paid for shall be the number of linear feet of fence actually removed, to the satisfaction of the Engineer. Measurement shall be made in place along the centerline of the top rail, from center to center of end posts.

6.18.9. PRICES TO COVER.

(A) PICKET FENCE. The price bid shall be a unit price per linear foot of Picket Fence and shall include the cost of all labor, material, equipment, and incidentals required to furnish and erect fence of the type specified including, but not limited to, shop drawings, gates, excavation, concrete post footings, backfill, and painting as required, all in accordance with the Contract Drawings, the specifications and the directions of the Engineer.

(B) PICKET FENCE REMOVED. The price bid shall be a unit price per linear foot of Picket Fence Removed and shall include the cost of all labor, material, equipment, and incidentals required to carefully remove existing fence, demolish its foundation wall and/or footing as applicable, and backfill the area, all in accordance with the Contract Drawings, the specifications and the directions of the Engineer. Removed fence shall be either delivered to the property owner or disposed of away from the site, as directed.

Payment will be made under:

Item No.	Item	Pay Unit
6.18 A	STEEL BAR PICKET FENCE	L.F.
6.18 D	DECORATIVE STEEL FENCE	L.F.
6.18 X	PICKET FENCE REMOVED	L.F.

SECTION 6.19 (VACANT)

SECTION 6.20 - Broken Stone Ballast

6.20.1. INTENT. This section describes the placing of Broken Stone Ballast.

6.20.2. DESCRIPTION. Broken Stone Ballast shall be placed where indicated on the Contract Drawings or directed.

Where the material underlying the structure is unsatisfactory the unsuitable material shall be removed and replaced with broken stone of the size number designated by the Engineer.

6.20.3. MATERIALS. The broken stone shall comply with the requirements of **Section 2.27**.

6.20.4. EXCAVATION. Excavation for the purpose of removing unsatisfactory material shall be made to the dimensions as directed.

6.20.5. METHODS.

(A) DEPOSITING AND COMPACTING BROKEN STONE

The broken stone shall be deposited and spread on the prepared earth subgrade in uniform horizontal layers not greater than six (6") inches in depth and each layer shall be thoroughly compacted.

(B) EARTH SUBGRADE

The subgrade shall not be in a muddy or frozen condition. No broken stone shall be placed unless the earth subgrade on which it is to be placed is in a condition acceptable to the Engineer.

6.20.6. MEASUREMENT. The quantity to be measured for payment shall be the number of cubic yards of compacted broken stone placed as shown on the Contract Drawings or as ordered by the Engineer, in accordance with the specifications.

6.20.7. PRICE TO COVER. The contract price, per cubic yard, for broken stone ballast, in place, shall cover the cost of all labor, materials, plant, equipment, insurance, and incidentals required to furnish and place broken stone ballast, complete, in place, and shall include all excavation (except rock excavation); the furnishing of such samples for testing as may be required; and furnishing all other necessary incidentals; all, in accordance with the Contract Drawings, the specifications and the directions of the Engineer.

Payment will be made under:

Item No.	Item	Pay Unit
6.20	BROKEN STONE BALLAST	C.Y.

SECTION 6.21 - Hydrants, Relocated

6.21.1. INTENT. This section describes the relocation of existing high and low pressure hydrants.

6.21.2. DESCRIPTION. Relocation shall consist of moving existing hydrants to new locations and resetting such hydrants to new lines and grades, as shown on the Contract Drawings or directed by

the Engineer. It shall include the removal and resetting of so much of the hydrant assembly (defined as the hydrant and all pipes, fittings and appurtenances between the hydrant and its hydrant valve) as may be required and the installation of additional new pipe, fittings and appurtenances for proper installation of the hydrant at its new location.

Reset hydrants and valve boxes shall consist of raising or lowering existing hydrants and valve box covers to proposed new grade in their present position.

6.21.3. MATERIALS. Additional pipe and fittings, and materials for joints, and such tie rods, collars, bolts, washers and other appurtenances as may be required by the standard construction details of the Department of Environmental Protection, Bureau of Water and Sewer Operations, shall be as approved by the Chief Engineer of the said Bureau.

Concrete for cradles shall comply with the requirements of **Section 3.05**, Class C-25, Type IIA. Portland cement, Type II, with an air-entraining agent added at the time of mixing; Type 1A sand; and Type 1, Grade B or Type 2, Size No. 57 coarse aggregate shall comply with the requirements of **Section 2.10**, **Section 2.21** and **Section 2.02**, respectively.

All other materials required shall be as per Water Supply Standards or as approved by the Engineer.

6.21.4. METHODS.

(A) HYDRANTS, RELOCATED

The installation of all materials, all work and necessary testing shall be done in accordance with the New York City Department of Environmental Protection, Standard Water Main Specifications and to the satisfaction of the Engineer.

Excavation shall be made sufficient to permit the construction of concrete cradles; the installation of pipe, fittings and appurtenances; the resetting of hydrants to proper line and grade; and the removal of existing hydrants and so much of the hydrant assemblies as may be required.

Sheeting and bracing shall comply with the requirements of Section 23-8, Rule No. 23, Industrial Code, Department of Labor, State of New York. The Engineer may require sheeting and bracing in excavations which are less than five (5') feet in depth when the character of the materials encountered warrants it.

At the completion of the work, sheeting and bracing shall be removed and the trench backfilled with suitable materials, compacted to the satisfaction of the Engineer.

The Contract Drawings, the specifications or the Engineer may require that a hydrant be relocated to either side of a point directly behind its original position. Such relocation shall be made by extending the pipe in the existing hydrant assembly on a line perpendicular to the curb to a point behind the curb, installing a 90° bend at that point and then running a single length of pipe, which shall be not more than eighteen (18') feet long, parallel to the curb, to the required final position of the hydrant.

(B) HYDRANT FENDERS

Unless otherwise directed, the Contractor to furnish and install two (2) steel hydrant fenders at each location where existing City-owned hydrants are relocated, reset, or to remain. See Standard Bureau of Water and Sewer Operations Drawing 45161-Z-A. At each of these hydrant locations, the Contractor shall construct around the hydrant and fenders a square concrete collar in accordance with Standard Bureau of Water and Sewer Operations Drawing 45161-Z-A, and flush with the adjacent curb and sidewalk surfaces. The concrete and finishing thereof, and joint filler, shall conform to the requirements of Item 4.13 AAS or 4.13 ABS, as applicable to match the adjacent sidewalk. The cost of the collar shall be included in the price bid for Hydrant Fenders.

(B) RESETTING HYDRANT FENDERS

Resetting of hydrant fenders shall be done only to existing hydrant fenders found imbedded in the temporary pavement at hydrant cuts and deemed by the Engineer to be in good condition for reuse. Fenders designated to be reused shall be carefully removed, cleaned and reset by the Contractor. Two (2) steel hydrant fenders are required at each hydrant cut location designated to be restored under this contract. Should new hydrant fenders be required to replace missing or damaged fenders, they shall be furnished, delivered and installed under Item 6.21 FE, as directed by the Engineer. At each designated hydrant cut restoration location, the Contractor shall construct around the hydrant and fenders a concrete collar in accordance with Standard Drawing 45161-A-Z, to be finished flush with the adjacent curb and sidewalk surfaces. The concrete and finishing thereof, and joint filler, shall be paid for under Item 4.13 BAH-S, or Item 4.13 BBH-S to match adjacent slabs. The cost of any additional depth of concrete embedment of fenders shall be included in the price bid for Reset Hydrant Fenders. Any damage caused as a result of the Contractor's operations to existing fenders designated to be reset shall be replaced by the Contractor, at no cost to the City.

6.21.5. MEASUREMENT. The quantity to be measured for payment shall be the number of low or high pressure hydrants relocated and/or reset, and the number of hydrant fenders installed and/or reset as required, complete, in place.

6.21.6. PRICES TO COVER. The contract prices for each type Hydrant, Relocated or Reset, with or without Valve Boxes Reset, and Hydrants Fenders shall be a unit price per each covering the cost of furnishing all labor, materials, plant, equipment, insurance, and incidentals required to complete the work and shall include, but not be limited to, all excavation (except rock excavation); sheeting and bracing; backfilling; samples and testing; all, together with necessary incidentals, in accordance with the Contract Drawings, the specifications, the directions of the Engineer and the requirements of the Department of Environmental Protection, Bureau of Water and Sewer Operations.

Before payment will be made hereunder, the Contractor shall obtain a Certificate of Acceptance and Approval from the Department of Environmental Protection, Bureau of Water and Sewer Operations, and shall file such certificate with the Engineer.

Payment will be made under:

Item No.	Item	Pay Unit
6.21 AA	RESET LOW PRESSURE HYDRANT	EACH
6.21 AB	RESET LOW PRESSURE HYDRANT AND VALVE BOX HEAD	EACH
6.21 AC	RELOCATE LOW PRESSURE HYDRANT	EACH
6.21 AD	RELOCATE LOW PRESSURE HYDRANT AND RESET VALVE BOX HEAD	EACH
6.21 BA	RESET HIGH PRESSURE HYDRANT	EACH
6.21 BB	RESET HIGH PRESSURE HYDRANT AND VALVE BOX HEAD	EACH
6.21 BC	RELOCATE HIGH PRESSURE HYDRANT	EACH
6.21 BD	RELOCATE HIGH PRESSURE HYDRANT AND RESET VALVE BOX HEAD	EACH
6.21 FE	FURNISHING, DELIVERING & INSTALLING HYDRANT FENDERS	EACH
6.21 FG	RESET HYDRANT FENDERS	EACH

SECTION 6.22 - Additional Hardware

6.22.1. INTENT. This section describes Additional Hardware.

6.22.2. DESCRIPTION. Additional Hardware shall include, but not be limited to, the furnishing and installation of metal eyes, bolts, nuts, washers, plates, steps, hooks, hoods, traps, frames, grates, covers and castings as replacements for broken or missing items in manhole, valve box, catch basin and inlet heads.

6.22.3. MATERIALS. New metal items shall comply with the requirements of the Department of Design and Construction's Standards, which are on file, for the type of head in which the replacement is to be made.

Other materials, required to be removed and restored for proper installation of replacement parts, shall comply with the requirements of Division II, Materials.

Mortar, when required, shall meet the requirements of **Section 3.07**, Type 2.

Concrete shall meet the requirements of **Section 3.05**, Type IIA, Class B-32. The materials used therein shall comply with the requirements of **Section 2.10**, Portland cement, Type II with an approved air-entraining agent added at the time of mixing; **Section 2.21**, sand, Type 1A; and **Section 2.02**, coarse aggregate, Type 1, Grade B, or Type 2, Size No. 57.

6.22.4. METHODS. When it is necessary to remove any part of an existing wearing course, concrete base, sidewalk, curb or masonry to expedite installation of replacement hardware, the manner and extent of such removal shall be made to the satisfaction of the Engineer and to such limits as he shall direct. Restoration of removed materials shall be made as directed by the Engineer.

Broken hardware shall be removed and broken or missing hardware shall be replaced, as shown on the Department's Standards and as directed by the Engineer.

6.22.5. MEASUREMENT. The quantity to be measured for payment shall be the number of pounds of additional hardware incorporated into the work, complete. The weights of individual items shall be based upon catalog weight, a manufacturer's certification, or the certification of a licensed Weighmaster, whichever the Engineer shall deem acceptable.

6.22.6. PRICE TO COVER. The contract price per pound for Additional Hardware shall cover the cost of all labor, materials, plant, equipment, insurance, and incidentals required to furnish and install said hardware, complete, in place, and shall include, but not be limited to, the removal and restoration of existing materials, the removal of broken or damaged existing hardware, replacement of broken, damaged or missing hardware with new hardware, and the installation of such new hardware, all, together with necessary incidentals, in accordance with the Contract Drawings, the specifications and the directions of the Engineer.

Payment will be made under:

Item No.	Item	Pay Unit
6.22 F	ADDITIONAL HARDWARE	POUND

SECTION 6.23 - Fire Department Facilities

6.23.1. INTENT. This Section describes the removal, relocation and resetting of existing Fire Department of New York (F.D.N.Y.) facilities.

6.23.2. DESCRIPTION. The work to be done under this section of the Specifications shall consist of constructing new fire communication facilities to replace similar existing facilities which will be in interference with the construction of new structure to be installed under this Contract. Fire Department facilities shall consist of boxes; housings; posts, including sub-bases and bases with integral terminal boxes; concrete foundations; fastening materials; conduit, bends and miscellaneous fittings; cable; and other necessary appurtenances.

6.23.3. MATERIALS. All materials shall comply with the standards and material specifications of the New York City Fire Department.

Any required Fire Alarm Post, Subbase and Hardware, Wire Terminal Boxes and fire alarm cables must be purchased and picked up from the Fire Department Storehouse, 87 Union Street, Brooklyn, N.Y. 11231-1416. Prior to bidding, the Contractor shall contact the Bureau of Fire Communications at (718) 624-4194 or (718) 624-3752 for the latest material cost of Fire Communications items. The Contractor shall also notify the Fire Department's Bureau of Fire Communications, telephone (718) 624-4194 or (718) 624-3752, at least forty-eight (48) hours in advance to arrange for pickup of materials purchased from the Fire Department. Pick up hours are between 8:30 A.M. and 1:30 P.M.

6.23.4. METHODS.

(A) GENERAL

At least thirty (30) days in advance of the start of construction, the Contractor shall be required to notify the Fire Department's Bureau of Fire Communications, as per **Subsection 1.06.23. (D), NOTICES**, to make an appointment to pick up FDNY base maps and to request street markouts of Fire Communications underground facilities.

All Fire Department work shall be done In accordance with the latest regulations, specifications and standards of The New York City Fire Department and under the direction of the Fire Department Engineer. Said Standards and Specifications for the work involved in the replacing of Fire Communications System facilities will be made available to the Contractor for reference at the:

Bureau of Fire Communications, Plant Operations Engineering
87 Union Street
Brooklyn, New York 11231-1416

Installation of new Fire Communications System facilities shall be made at locations indicated on the Contract Drawings or as directed by the Engineer and may include: removal and/or salvage of such portions of the existing system as may be required by the Fire Department, Bureau of Fire Communications; connection of the new facilities to the existing adjoining portions of the fire communication network; furnishing and placing of select granular fill material for backfilling all around fire duct; cutting out portions of the existing fire ducts without damage to the cable or cables contained therein; testing of the completed work; protection and maintenance of the system for the duration of the guarantee period, and all work incidental thereto.

The Contractor shall be required to furnish and install all necessary Fire Department facilities, conduits, cables, etc., under the appropriately scheduled items. Any obstruction encountered in pulling the cable shall be cleared by the Contractor to the satisfaction of the Engineer. The F.D.N.Y. Communications Electricians will perform the live splicing operations in manholes and make all transfers of alarm boxes and/or aerial cables.

The electrical subcontractor must make an appointment with the Bureau of Fire Communications to attend a brief tutorial on terminating fire alarm cables to terminal boxes.

At the close of any project involving construction or alterations to fire alarm facilities, one hard copy and one electronic copy (PDF Format) of proposed utility plan sheets and/or sketches of "AS-BUILT" changes must be provided to the Bureau of Communications Engineering Office at 87 Union Street, Brooklyn, NY 11231.

The Contractor's attention is directed to the requirement that the existing Fire Alarm Communications System shall be maintained continuously in service until the communications services are transferred to the new facilities, except as otherwise permitted by written authorization of the New York City Fire Department. The Contractor shall not schedule or commence any phase of the work of this contract which would disrupt or interfere with the operation of the existing Fire Communications System until the new system is operational to the satisfaction of the New York City Fire Department.

Temporary Fire Alarm Communications facilities may be installed upon written authorization by the New York City Fire Department whenever the scheduling of other phases of the work of this Contract may be adversely affected, in the opinion of the Engineer, by the necessity of prior completion of the installation of the new Fire Alarm Communications System facilities. Except upon written authorization for this installation of temporary fire alarm communication facilities, the Contractor shall not schedule or commence any phase of the work that would disrupt or interfere with the operation of the existing Fire Communications System until the new system is operational to the satisfaction of the New York City Fire Department.

The Contractor shall notify the Fire Department Bureau of Fire Communications, telephone (718) 624-4194, at least two (2) weeks in advance of starting work on any Fire Department facilities to permit the Department to de-energize their facility, if necessary. Removal operations shall not start until Fire Department permission has been obtained.

The Fire Department may install part or parts of a facility. The extent of such Fire Department installation shall be as noted on the Contract Drawings. Unless so noted, installation shall be made by the Contractor.

All bends not at fire alarm posts or poles are to be forty-eight (48") inches in radius.

The Contractor shall notify the Fire Department when relocation of each facility is completed. The said Department will make the live splices at the manhole required to energize the facility and transfer the alarm box, if applicable, to the new facility. Allow the Fire Department at least two (2) weeks to perform this work.

Also, see **Subsection 1.06.23. (Q)** for additional requirements.

(B) EXCAVATION

Excavation shall be made to the depths and dimensions required for the removal of existing foundations and conduit; construction of new foundations; and the installation of new conduit. Where a double conduit is specified, they shall be installed in the same trench, one on top of the other, with the top conduit installed at least thirty (30") inches below grade. All excavations shall be backfilled with acceptable materials and compacted to the satisfaction of the Engineer.

(C) REMOVAL

Old deactivated fire alarm empty housings and posts shall be removed, hauled, and delivered by the Contractor to a designated Fire Department storehouse, only after written permission has been obtained from authorized Fire Department personnel (Borough Supervisor or Engineer).

Old terminal boxes, conduit and cable, to the extent designated by the Engineer, and existing foundations shall be removed and disposed of away from the site of the work.

(D) NEW CONSTRUCTION

The Contractor, under the appropriately scheduled items, shall be required to furnish and install concrete for foundations; furnish and install all necessary Fire Department facilities, conduits, conduit bends, cables, etc.; and, provide all necessary fastening, supporting or anchoring materials. Any obstruction encountered in pulling the cable shall be cleared by the Contractor to the satisfaction of the Engineer.

Where a double conduit is specified, they shall be installed in the same trench, one on top of the other, with the top conduit installed at least thirty (30") inches below grade.

Unless otherwise noted on the Contract Drawings, the Contractor shall furnish and install new conduit and cables and shall make all necessary connections, except for the live splice in the appropriate manhole and the transfer of the alarm box and/or aerial cable which shall both be performed by Fire Department Communications Electricians.

(E) LETTER OF ACCEPTANCE

Upon completion of the Fire Communications System work, the Contractor shall be required to apply for and obtain a letter of acceptance from the New York City Fire Department, Bureau of Fire Communications indicating that all Fire Communications System work has been completed in accordance with the Specifications.

Final payment of this Contract will be withheld until such letter is filed with the Department of Design and Construction.

(F) PERMITS

The Contractor shall obtain all necessary permits from the New York City Fire Department, the telephone company and/or the New York City Department of Transportation.

(G) DAMAGE REPLACEMENT

In accordance with requirements of **Subsection 1.06.23.(Q)** concerning protection of City structures, no separate payment will be made for work involved in protecting the existing Fire Communications System from damage, or for work involved in replacing or repairing such system, and the cost thereof shall be deemed included in the price bid for all the items of this Contract.

Any such repair or replacement work to be done in regard to the fire communication structures including workmanship and testing shall be performed in accordance with the latest Specifications, Standards, practices and under the inspection of the New York City Fire Department.

(H) PAINTING EXISTING F.D. POSTS AND/OR BOXES

Where and when directed, the Contractor shall be required to paint existing Fire Department Posts and/or Boxes in accordance with the latest Specifications, Standards, and practices of the New York City Fire Department.

6.23.5. MEASUREMENT.

(A) The quantities of

ITEM NO. 6.23 AA	FURNISH AND INSTALL FIRE ALARM POST IN ACCORDANCE WITH F.D. STD. DWG. #141
ITEM NO. 6.23 BA	FURNISH AND INSTALL FIRE ALARM POST AND SUBBASE IN ACCORDANCE WITH F.D. STD. DWG. #141
ITEM NO. 6.23 AB	REMOVE EXISTING FIRE ALARM POST

ITEM NO. 6.23 AC ADJUST FIRE ALARM POST TO NEW GRADE IN ACCORDANCE WITH F.D. STD. DWG. #167

to be measured for payment shall be the number of fire alarm posts with or without subbases, as specified, incorporated in the work as shown, specified or required, to the satisfaction of the Engineer; the number of fire alarm posts and/or empty housings actually delivered to the Fire Department's storehouse as shown, specified or required, to the satisfaction of the Engineer; or, the number of fire alarm posts adjusted to the new grade as shown, specified or required, to the satisfaction of the Engineer.

(B) The quantities of

ITEM NO. 6.23 AF FURNISH AND INSTALL FIRE DEPARTMENT POLE TERMINAL (CHIPPY) BOX IN ACCORDANCE WITH FIRE DEPARTMENT STANDARD DRAWING #145AA

ITEM NO. 6.23 BF FURNISH AND INSTALL FIRE DEPARTMENT POLE TERMINAL (HOFFMAN) BOX IN ACCORDANCE WITH FIRE DEPARTMENT STANDARD DRAWING #146

to be measured for payment shall be the number of pole terminal boxes of each type, incorporated in the work, complete, as shown, specified or required, to the satisfaction of the Engineer.

(C) The quantities of

ITEM NO. 6.23 BBS FURNISH AND INSTALL 3" 90 DEGREE P.V.C. WIDE BEND, SCHEDULE 40, U.L. 651 (WITHOUT PAVEMENT EXCAVATION) IN ACCORDANCE WITH F.D. STD. DWG. #141

ITEM NO. 6.23 BBSE FURNISH AND INSTALL 3" 90 DEGREE P.V.C. WIDE BEND, SCHEDULE 40, U.L. 651 (WITH PAVEMENT EXCAVATION) IN ACCORDANCE WITH F.D. STD. DWG. #141

ITEM NO. 6.23 BH FURNISH AND INSTALL 4" 90 DEGREE P.V.C. WIDE BEND, SCHEDULE 40, U.L. 651 (WITHOUT PAVEMENT EXCAVATION) IN ACCORDANCE WITH F.D. STD. DWG. #141 OR #145AA

ITEM NO. 6.23 BHE FURNISH AND INSTALL 4" 90 DEGREE P.V.C. WIDE BEND, SCHEDULE 40, U.L. 651 (WITH PAVEMENT EXCAVATION) IN ACCORDANCE WITH F.D. STD. DWG. #141 OR #145AA

ITEM NO. 6.23 CB FURNISH AND INSTALL 2 – 3" 90 DEGREE P.V.C. WIDE BENDS, SCHEDULE 40, U.L. 651 IN ONE TRENCH (WITHOUT PAVEMENT EXCAVATION) IN ACCORDANCE WITH F.D. STD. DWG. #141

ITEM NO. 6.23 CBE FURNISH AND INSTALL 2 – 3" 90 DEGREE P.V.C. WIDE BENDS, SCHEDULE 40, U.L. 651 IN ONE TRENCH (WITH PAVEMENT EXCAVATION) IN ACCORDANCE WITH F.D. STD. DWG. #141

ITEM NO. 6.23 XBB FURNISH AND INSTALL 2" STEEL GALVANIZED 90 DEGREE BEND (WITHOUT PAVEMENT EXCAVATION) IN ACCORDANCE WITH F.D. STD. DWG. #145BB

ITEM NO. 6.23 XBBE FURNISH AND INSTALL 2" STEEL GALVANIZED 90 DEGREE BEND (WITH PAVEMENT EXCAVATION) IN ACCORDANCE WITH F.D. STD. DWG. #145BB

to be measured for payment shall be the number of bends of each type and size of eighteen (18") inch radius for fire alarm posts or poles installed in the work, complete, as shown, specified or required, to the satisfaction of the Engineering.

(D) The quantities of

ITEM NO. 6.23 BCS FURNISH AND INSTALL 3" P.V.C. CONDUIT, SCHEDULE 40, U.L. 651 (WITHOUT PAVEMENT EXCAVATION)

ITEM NO. 6.23 BCSE	FURNISH AND INSTALL 3" P.V.C. CONDUIT, SCHEDULE 40, U.L. 651 (WITH PAVEMENT EXCAVATION)
ITEM NO. 6.23 BGS	FURNISH AND INSTALL 4" P.V.C. CONDUIT, SCHEDULE 40, U.L. 651 (WITHOUT PAVEMENT EXCAVATION)
ITEM NO. 6.23 BGSE	FURNISH AND INSTALL 4" P.V.C. CONDUIT, SCHEDULE 40, U.L. 651 (WITH PAVEMENT EXCAVATION)
ITEM NO. 6.23 BGT	FURNISH AND INSTALL 2 – 4" P.V.C. CONDUITS, SCHEDULE 40, U.L. 651 IN ONE TRENCH (WITHOUT PAVEMENT EXCAVATION, ONE ON TOP OF THE OTHER)
ITEM NO. 6.23 BGTE	FURNISH AND INSTALL 2 – 4" P.V.C. CONDUITS, SCHEDULE 40, U.L. 651 IN ONE TRENCH (WITH PAVEMENT EXCAVATION, ONE ON TOP OF THE OTHER)
ITEM NO. 6.23 CC	FURNISH AND INSTALL 2 – 3" P.V.C. CONDUITS, SCHEDULE 40, U.L. 651 IN ONE TRENCH (WITHOUT PAVEMENT EXCAVATION, ONE ON TOP OF THE OTHER)
ITEM NO. 6.23 CCE	FURNISH AND INSTALL 2 – 3" P.V.C. CONDUITS, SCHEDULE 40, U.L. 651 IN ONE TRENCH (WITH PAVEMENT EXCAVATION, ONE ON TOP OF THE OTHER)
ITEM NO. 6.23 XB	FURNISH AND INSTALL 2" STEEL GALVANIZED CONDUIT (WITHOUT PAVEMENT EXCAVATION)
ITEM NO. 6.23 XBE	FURNISH AND INSTALL 2" STEEL GALVANIZED CONDUIT (WITH PAVEMENT EXCAVATION)
ITEM NO. 6.23 XC	FURNISH AND INSTALL 3" GALVANIZED STEEL CONDUIT (WITHOUT PAVEMENT EXCAVATION)
ITEM NO. 6.23 XCE	FURNISH AND INSTALL 3" GALVANIZED STEEL CONDUIT (WITH PAVEMENT EXCAVATION)

to be measured for payment shall be the number of linear feet of each size, number and kind of fire communication conduit and forty-eight (48") radius bends incorporated in the work, complete, as shown, specified or required, to the satisfaction of the Engineer, measured along the center line of each run of fire communication conduit, from center line of manhole to center line of manhole or to center line of fire alarm post or pole, as is applicable.

(E) The quantities of

ITEM NO. 6.23 BD	FURNISH AND INSTALL 4-PAIR FIRE ALARM CABLE
ITEM NO. 6.23 DC	FURNISH AND INSTALL 10 PAIR FIRE ALARM CABLE
ITEM NO. 6.23 DDA	FURNISH AND INSTALL 15 PAIR FIRE ALARM CABLE
ITEM NO. 6.23 DDB	FURNISH AND INSTALL 20 PAIR FIRE ALARM CABLE
ITEM NO. 6.23 DDC	FURNISH AND INSTALL 25 PAIR FIRE ALARM CABLE
ITEM NO. 6.23 DDD	FURNISH AND INSTALL 30 PAIR FIRE ALARM CABLE
ITEM NO. 6.23 DDE	FURNISH AND INSTALL 40 PAIR FIRE ALARM CABLE
ITEM NO. 6.23 DF	FURNISH AND INSTALL 45 PAIR FIRE ALARM CABLE
ITEM NO. 6.23 DG	FURNISH AND INSTALL 50 PAIR FIRE ALARM CABLE
ITEM NO. 6.23 DH	FURNISH AND INSTALL 55 PAIR FIRE ALARM CABLE
ITEM NO. 6.23 DJ	FURNISH AND INSTALL 60 PAIR FIRE ALARM CABLE

to be measured for payment shall be the number of linear feet of each size and type of fire alarm cable, including slack, incorporated in the work, complete, as shown, specified or required, to the satisfaction of the Engineer, measured along the centerline of each run of fire alarm cable, continuously through manholes.

(F) The quantities of

ITEM NO. 6.23 BE	FURNISH AND INSTALL FIRE DEPARTMENT MANHOLE TYPE "A" WITH FRAME AND COVER IN ACCORDANCE WITH F.D. STD. DWG. #140, #144, & #144E

ITEM NO. 6.23 BES	FURNISH AND INSTALL FIRE DEPARTMENT SLOTTED MANHOLE TYPE "A" WITH FRAME AND COVER IN ACCORDANCE WITH F.D. STD. DWG. #140, #144S & #144E
ITEM NO. 6.23 EB	FURNISH AND INSTALL FIRE DEPARTMENT MANHOLE TYPE "B" WITH FRAME & COVER IN ACCORDANCE WITH F.D. STD. DWG. #140, #144, #144C, #144CC, & #144E
ITEM NO. 6.23 HH	FURNISH AND INSTALL F.D.N.Y. SIDEWALK HANDHOLE WITH FRAME AND COVER IN ACCORDANCE WITH F.D. STD. DWG. #143, #144B, & #144E
ITEM NO. 6.23 HHS	FURNISH AND INSTALL F.D.N.Y. SIDEWALK SLOTTED HANDHOLE WITH FRAME AND COVER IN ACCORDANCE WITH F.D. STD. DWG. #144E & #144BS

to be measured for payment shall be the number of each type manhole or handhole installed in the work, complete, as shown, specified or required, to the satisfaction of the Engineer.

(G) The quantities of

ITEM NO. 6.23 BFA	FURNISH AND INSTALL FIRE DEPARTMENT 48 WIRE TERMINAL BOX AND TERMINATE FIRE ALARM CABLES
ITEM NO. 6.23 BFB	FURNISH AND INSTALL FIRE DEPARTMENT 24 WIRE TERMINAL BOX AND TERMINATE FIRE ALARM CABLES
ITEM NO. 6.23 BFC	FURNISH AND INSTALL FIRE DEPARTMENT 12 WIRE TERMINAL BOX AND TERMINATE FIRE ALARM CABLES

to be measured for payment shall be the number of terminal boxes of each type, incorporated in the work, complete, as shown, specified or required, to the satisfaction of the Engineer.

(H) The quantity of

ITEM NO. 6.23 BGR	FURNISH AND INSTALL 4" PVC CONDUIT TO 2" GALVANIZED STEEL REDUCER BUSHING AS SHOWN IN F.D. STD. DWG. #145AA

to be measured for payment shall be the number of reducers, incorporated in the work, complete, as shown, specified or required, to the satisfication of the Engineer.

(I) The quantity of

ITEM NO. 6.23 BP	FURNISH AND INSTALL FIRE ALARM PEDESTAL BUMPERS (2 REQUIRED PER SET) IN ACCORDANCE WITH F.D. STD. DWG. #168

to be measured for payment shall be the number of sets of bumpers, incorporated in the work, complete, as shown, specified or required, to the satisfaction of the Engineer. Each set shall consist of two (2) bumpers.

(J) The quantities of

ITEM NO. 6.23 FC	REMOVE EXISTING F.D.N.Y. MANHOLE FRAME & COVER AND FURNISH AND INSTALL F.D.N.Y. FRAME & COVER IN ACCORDANCE WITH F.D. STD. DWG. #140
ITEM NO. 6.23 HFC	REMOVE EXISTING F.D.N.Y. SIDEWALK HANDHOLE FRAME & COVER AND FURNISH AND INSTALL F.D.N.Y. SIDEWALK HANDHOLE FRAME & COVER IN ACCORDANCE WITH F.D. STD. DWG. #143 & #144B

to be measured for payment shall be the number of each type of existing F.D.N.Y. manhole frame & cover or sidewalk handhole frame & cover that have been replaced, at the locations shown or as directed and as shown on the Fire Department Standards, to the satisfaction of the Engineer.

(K) The quantities of

ITEM NO. 6.23 FCA	FURNISH AND INSTALL F.D.N.Y. MANHOLE FRAME & COVER IN ACCORDANCE WITH F.D. STD. DWG. #140
ITEM NO. 6.23 FCB	FURNISH AND INSTALL F.D.N.Y. MANHOLE COVER IN ACCORDANCE WITH F.D. STD. DWG. #140
ITEM NO. 6.23 HC	FURNISH AND INSTALL F.D.N.Y. SIDEWALK HANDHOLE COVER IN ACCORDANCE WITH F.D. STD. DWG. #143 AND #144B
ITEM NO. 6.23 HFCA	FURNISH AND INSTALL F.D.N.Y. SIDEWALK HANDHOLE FRAME AND COVER IN ACCORDANCE WITH F.D. STD. DWG. #143 AND #144B

to be measured for payment shall be the number of new manhole or sidewalk handhole frames with covers or manhole or sidewalk handhole covers incorporated in the work, complete, as shown, specified or required, to the satisfaction of the Engineer.

(L) The quantities of

ITEM NO. 6.23 RH	REMOVE EXISTING F.D.N.Y. SIDEWALK HANDHOLE
ITEM NO. 6.23 RM	REMOVE EXISTING F.D.N.Y. MANHOLE

to be measured for payment shall be the number of F.D.N.Y. manholes or sidewalk handholes actually removed, as specified, at the location shown or as directed, to the satisfaction of the Engineer.

(M) The quantities of

ITEM NO. 6.23 RIC	RODDING AND INSTALLING FIRE ALARM CABLE IN EXISTING TELEPHONE CONDUIT SYSTEM
ITEM NO. 6.23 RR	ROD AND ROPE EXISTING CONDUIT
ITEM NO. 6.23 XY	FURNISH AND INSTALL POLYPROPYLENE DRAG ROPE

to be measured for payment shall be the number of linear feet of drag rope, with or without rodding, or cable with rodding, including slack, incorporated in the work, complete, as shown, specified or required, to the satisfaction of the Engineer, measured along the center line of each run of drag rope.

(N) The quantities of

ITEM NO. 6.23 XAPE	FURNISH AND INSTALL 1/2" GALVANIZED STEEL CONDUIT POLE RISER IN ACCORDANCE WITH FIRE DEPARTMENT STANDARD DRAWING #145AA
ITEM NO. 6.23 XBPE	FURNISH AND INSTALL 2" GALVANIZED STEEL CONDUIT POLE RISER IN ACCORDANCE WITH FIRE DEPARTMENT STANDARD DRAWING #145AA

to be measured for payment shall be the number of each type of conduit pole riser installed in the work, complete, as shown, specified or required, to the satisfaction of the Engineer.

(O) The quantity of

ITEM NO. 6.23 PP	PAINT EXISTING FIRE ALARM POST AND/OR BOX

to be measured for payment shall be the number of fire alarm posts and/or boxes painted, complete, as specified or required, to the satisfaction of the Engineer.

6.23.6. PRICES TO COVER. Before payment is made for work done under this Section, the Contractor shall obtain a Certificate of Compliance from the Fire Department and file such certificate with the Engineer. The said certificate shall certify that all work at each location complies with the standards of, and is acceptable to, the Fire Department, Bureau of Communications.

The following contract items shall also include the cost of the permits and the letter of acceptance required and necessary to construct the new Fire Communications System at the locations shown or required all in accordance with the Contract Drawings, Specifications and Standards, and as directed by the Engineer.

(A) The contract prices bid for

ITEM NO. 6.23 AA	FURNISH AND INSTALL FIRE ALARM POST IN ACCORDANCE WITH F.D. STD. DWG. #141
ITEM NO. 6.23 BA	FURNISH AND INSTALL FIRE ALARM POST AND SUBBASE IN ACCORDANCE WITH F.D. STD. DWG. #141
ITEM NO. 6.23 AB	REMOVE EXISTING FIRE ALARM POST
ITEM NO. 6.23 AC	ADJUST FIRE ALARM POST TO NEW GRADE IN ACCORDANCE WITH F.D. STD. DWG. #167

shall be a unit price for each and shall cover the cost of all labor, materials, plant, equipment, insurance, samples, and tests required and necessary to furnish and install fire alarm post with or without subbase, as specified, and at the location shown or as directed and as shown on the Fire Department Standards; or to remove the fire alarm post and/or empty housing at the locations shown and deliver them to the Fire Department's Storehouse as directed; and shall include, but not be limited to, adjustment of base, subbase, and terminal box appurtenances, as may be required, at the locations shown or as directed. Said work shall include, but not be limited to, furnishing and installing base, subbase when specified, and appurtenances; connections; and furnishing and installing all other items necessary to complete this work and do all work incidental thereto, all in accordance with the Contract Drawings, Specifications and Standards, and as directed by the Engineer.

(B) The contract prices bid for

ITEM NO. 6.23 AF	FURNISH AND INSTALL FIRE DEPARTMENT POLE TERMINAL (CHIPPY) BOX IN ACCORDANCE WITH FIRE DEPARTMENT STANDARD DRAWING #145AA
ITEM NO. 6.23 BF	FURNISH AND INSTALL FIRE DEPARTMENT POLE TERMINAL (HOFFMAN) BOX IN ACCORDANCE WITH FIRE DEPARTMENT STANDARD DRAWING #146

shall be a unit price for each type pole terminal box and shall cover the cost of all labor, materials, plant, equipment, insurance, samples, and tests required and necessary to furnish and install the pole terminal box of the type and at the locations shown or as directed and as shown on the Fire Department Standards. Said work shall also include, but not limited to, connections, cable terminations, and furnishing and installing all other items necessary to complete this work and doing all work incidental thereto, all in accordance with the Contract Drawings, Specifications and Standards, and as directed by the Engineer.

(C) The contract prices bid for

ITEM NO. 6.23 BBS	FURNISH AND INSTALL 3" 90 DEGREE P.V.C. WIDE BEND, SCHEDULE 40, U.L. 651 (WITHOUT PAVEMENT EXCAVATION) IN ACCORDANCE WITH F.D. STD. DWG. #141
ITEM NO. 6.23 BBSE	FURNISH AND INSTALL 3" 90 DEGREE P.V.C. WIDE BEND, SCHEDULE 40, U.L. 651 (WITH PAVEMENT EXCAVATION) IN ACCORDANCE WITH F.D. STD. DWG. #141
ITEM NO. 6.23 BH	FURNISH AND INSTALL 4" 90 DEGREE P.V.C. WIDE BEND, SCHEDULE 40, U.L. 651 (WITHOUT PAVEMENT EXCAVATION) IN ACCORDANCE WITH F.D. STD. DWG. #141 OR #145AA
ITEM NO. 6.23 BHE	FURNISH AND INSTALL 4" 90 DEGREE P.V.C. WIDE BEND, SCHEDULE 40, U.L. 651 (WITH PAVEMENT EXCAVATION) IN ACCORDANCE WITH F.D. STD. DWG. #141 OR #145AA

ITEM NO. 6.23 CB	FURNISH AND INSTALL 2 – 3" 90 DEGREE P.V.C. WIDE BENDS, SCHEDULE 40, U.L. 651 IN ONE TRENCH (WITHOUT PAVEMENT EXCAVATION) IN ACCORDANCE WITH F.D. STD. DWG. #141
ITEM NO. 6.23 CBE	FURNISH AND INSTALL 2 – 3" 90 DEGREE P.V.C. WIDE BENDS, SCHEDULE 40, U.L. 651 IN ONE TRENCH (WITH PAVEMENT EXCAVATION) IN ACCORDANCE WITH F.D. STD. DWG. #141
ITEM NO. 6.23 XBB	FURNISH AND INSTALL 2" GALVANIZED STEEL 90 DEGREE BEND (WITHOUT PAVEMENT EXCAVATION) IN ACCORDANCE WITH F.D. STD. DWG. #145BB
ITEM NO. 6.23 XBBE	FURNISH AND INSTALL 2" GALVANIZED STEEL 90 DEGREE BEND (WITH PAVEMENT EXCAVATION) IN ACCORDANCE WITH F.D. STD. DWG. #145BB

shall be a unit price for each type of conduit bend, single or double, with or without pavement excavation, as specified, and shall cover the cost of all labor, materials, plant, equipment, insurance, samples, and tests required and necessary to furnish and install a two (2") or three (3") or four (4") inch bend, single or double in one trench, of eighteen (18") inch radius for fire alarm posts or poles at the locations shown or as directed and as shown on the Fire Department Standards. Said work shall also include, but not be limited to, excavation and backfilling, connections, and furnishing and installing all other items necessary to complete this work and doing all work incidental thereto, all in accordance with the Contract Drawings, Specifications and Standards, and as directed by the Engineer.

(D) The contract prices bid for

ITEM NO. 6.23 BCS	FURNISH AND INSTALL 3" P.V.C. CONDUIT, SCHEDULE 40, U.L. 651 (WITHOUT PAVEMENT EXCAVATION)
ITEM NO. 6.23 BCSE	FURNISH AND INSTALL 3" P.V.C. CONDUIT, SCHEDULE 40, U.L. 651 (WITH PAVEMENT EXCAVATION)
ITEM NO. 6.23 BGS	FURNISH AND INSTALL 4" P.V.C. CONDUIT, SCHEDULE 40, U.L. 651 (WITHOUT PAVEMENT EXCAVATION)
ITEM NO. 6.23 BGSE	FURNISH AND INSTALL 4" P.V.C. CONDUIT, SCHEDULE 40, U.L. 651 (WITH PAVEMENT EXCAVATION)
ITEM NO. 6.23 BGT	FURNISH AND INSTALL 2 – 4" P.V.C. CONDUITS, SCHEDULE 40, U.L. 651 IN ONE TRENCH (WITHOUT PAVEMENT EXCAVATION, ONE ON TOP OF THE OTHER)
ITEM NO. 6.23 BGTE	FURNISH AND INSTALL 2 – 4" P.V.C. CONDUITS, SCHEDULE 40, U.L. 651 IN ONE TRENCH (WITH PAVEMENT EXCAVATION, ONE ON TOP OF THE OTHER)
ITEM NO. 6.23 CC	FURNISH AND INSTALL 2 – 3" P.V.C. CONDUITS, SCHEDULE 40, U.L. 651 IN ONE TRENCH (WITHOUT PAVEMENT EXCAVATION, ONE ON TOP OF THE OTHER)
ITEM NO. 6.23 CCE	FURNISH AND INSTALL 2 – 3" P.V.C. CONDUITS, SCHEDULE 40, U.L. 651 IN ONE TRENCH (WITH PAVEMENT EXCAVATION, ONE ON TOP OF THE OTHER)
ITEM NO. 6.23 XB	FURNISH AND INSTALL 2" GALVANIZED STEEL CONDUIT (WITHOUT PAVEMENT EXCAVATION)
ITEM NO. 6.23 XBE	FURNISH AND INSTALL 2" GALVANIZED STEEL CONDUIT (WITH PAVEMENT EXCAVATION)
ITEM NO. 6.23 XC	FURNISH AND INSTALL 3" GALVANIZED STEEL CONDUIT (WITHOUT PAVEMENT EXCAVATION)
ITEM NO. 6.23 XCE	FURNISH AND INSTALL 3" GALVANIZED STEEL CONDUIT (WITH PAVEMENT EXCAVATION)

shall be a unit price per linear foot for each size and kind of fire communication conduit and forty-eight (48") inch radius bends, single or double, with or without pavement excavation, as specified, and shall cover the cost of all labor, materials, plant, equipment, insurance, samples, and tests required and necessary to furnish and install the fire communication conduit (single or double in one trench) of the

sizes and kind (P.V.C. or Galvanized Steel) specified, to the lines and grades and at the locations shown or as directed, with or without pavement excavation, as specified, of all materials of whatever nature encountered (except excavation of boulders in open cut and ledge rock). Said work shall also include, but not limited to, concrete cradles and encasements as required; all sheeting and bracing; pumping; bridging, decking; removal or abandonment, as required, of parts of the existing Fire Communications System; breaking down and filling in of abandoned fire appurtenances; furnishing and installing select granular fill material for backfill; backfilling; compaction; cleaning up; temporary restoration of street surfaces; installation and removal of temporary fire alarm communication facilities, if required; connections; and furnishing and installing all other items necessary to complete this work and do all work incidental thereto, all in accordance with the Contract Drawings, Specifications and Standards, and as directed by the Engineer.

(E) The contract prices bid for

ITEM NO. 6.23 BD	FURNISH AND INSTALL 4 PAIR FIRE ALARM CABLE
ITEM NO. 6.23 DC	FURNISH AND INSTALL 10 PAIR FIRE ALARM CABLE
ITEM NO. 6.23 DDA	FURNISH AND INSTALL 15 PAIR FIRE ALARM CABLE
ITEM NO. 6.23 DDB	FURNISH AND INSTALL 20 PAIR FIRE ALARM CABLE
ITEM NO. 6.23 DDC	FURNISH AND INSTALL 25 PAIR FIRE ALARM CABLE
ITEM NO. 6.23 DDD	FURNISH AND INSTALL 30 PAIR FIRE ALARM CABLE
ITEM NO. 6.23 DDE	FURNISH AND INSTALL 40 PAIR FIRE ALARM CABLE
ITEM NO. 6.23 DF	FURNISH AND INSTALL 45 PAIR FIRE ALARM CABLE
ITEM NO. 6.23 DG	FURNISH AND INSTALL 50 PAIR FIRE ALARM CABLE
ITEM NO. 6.23 DH	FURNISH AND INSTALL 55 PAIR FIRE ALARM CABLE
ITEM NO. 6.23 DJ	FURNISH AND INSTALL 60 PAIR FIRE ALARM CABLE

shall be a unit price per linear foot for each size and type of fire alarm cable, and shall cover the cost of all labor, materials, plant, equipment, insurance, samples, and tests required and necessary to furnish and install the fire alarm cable of the sizes and at the locations shown or as directed. Said work shall also include, but not be limited to, the cost of splices as required; cutting existing conduit, if required; protection and maintenance of the system for the duration of the guarantee period as required; and furnishing and installing all other items necessary to complete this work and do all work incidental thereto, all in accordance with the Contract Drawings, Specifications and Standards, and as directed by the Engineer.

(F) The contract prices bid for

ITEM NO. 6.23 BE	FURNISH AND INSTALL FIRE DEPARTMENT MANHOLE TYPE “A” WITH FRAME AND COVER IN ACCORDANCE WITH F.D. STD. DWG. #140, #144, & #144E
ITEM NO. 6.23 BES	FURNISH AND INSTALL FIRE DEPARTMENT SLOTTED MANHOLE TYPE “A” WITH FRAME AND COVER IN ACCORDANCE WITH F.D. STD. DWG. #140, #144S & #144E
ITEM NO. 6.23 EB	FURNISH AND INSTALL FIRE DEPARTMENT MANHOLE TYPE “B” WITH FRAME & COVER IN ACCORDANCE WITH F.D. STD. DWG. #140, #144, #144C, #144CC, & #144E
ITEM NO. 6.23 HH	FURNISH AND INSTALL F.D.N.Y. SIDEWALK HANDHOLE WITH FRAME AND COVER IN ACCORDANCE WITH F.D. STD. DWG. #143, #144B, & #144E
ITEM NO. 6.23 HHS	FURNISH AND INSTALL F.D.N.Y. SIDEWALK SLOTTED HANDHOLE WITH FRAME AND COVER IN ACCORDANCE WITH F.D. STD. DWG. #144E & #144BS

shall be a unit price for each type manhole or sidewalk handhole and shall cover the cost of all labor, materials, plant, equipment, insurance, samples, and tests required and necessary to furnish and install the Fire Department manhole with frame and cover or sidewalk handhole with frame and cover, as specified, at the locations shown or as directed and as shown on the Fire Department Standards. Said work shall also include, but not limited to, excavation of all materials of whatever nature encountered

(except excavation of boulders in open cut and ledge rock); reinforcement; all sheeting and bracing; pumping; bridging, decking; removal or abandonment, as required of parts of the existing Fire Communications System; breaking down and filling in of abandoned fire appurtenances; backfill; compaction; cleaning up; temporary restoration of street surfaces; installation and removal of temporary fire alarm communication facilities, if required; connections; and furnishing and installing all other items necessary to complete this work and do all work incidental thereto, all in accordance with the Contract Drawings, Specifications and Standards, and as directed by the Engineer.

(G) The contract prices bid for

ITEM NO. 6.23 BFA	FURNISH AND INSTALL FIRE DEPARTMENT 48 WIRE TERMINAL BOX AND TERMINATE FIRE ALARM CABLES
ITEM NO. 6.23 BFB	FURNISH AND INSTALL FIRE DEPARTMENT 24 WIRE TERMINAL BOX AND TERMINATE FIRE ALARM CABLES
ITEM NO. 6.23 BFC	FURNISH AND INSTALL FIRE DEPARTMENT 12 WIRE TERMINAL BOX AND TERMINATE FIRE ALARM CABLES

shall be a unit price bid for each type cable terminal box and shall cover the cost of all labor, materials, plant, equipment, insurance, samples, and tests required and necessary to furnish and install the cable terminal box of the type and at the locations shown or as directed and as shown on the Fire Department Standards. Said work shall also include, but not be limited to, connections, cable terminations, and furnishing and installing all other items necessary to complete this work and do all work incidental thereto, all in accordance with the Contract Drawings, Specifications and Standards, and as directed by the Engineer.

(H) The contract price bid for

ITEM NO. 6.23 BGR	FURNISH AND INSTALL 4" PVC CONDUIT TO 2" GALVANIZED STEEL REDUCER BUSHING AS SHOWN IN F.D. STD. DWG. #145AA

shall be a unit price bid for each reducer and shall cover the cost of all labor, materials, plant, equipment, insurance, samples, and tests required and necessary to furnish and install a reducer of the type and at the location shown or as directed and as shown on the Fire Department Standards. Said work shall also include, but not be limited to, furnishing and installing all other items necessary to complete this work and do all work incidental thereto, all in accordance with the Contract Drawings, Specifications and Standards, and as directed by the Engineer.

(I) The contract price bid for

ITEM NO. 6.23 BP	FURNISH AND INSTALL FIRE ALARM PEDESTAL BUMPERS (2 REQUIRED PER SET) IN ACCORDANCE WITH F.D. STD. DWG. #168

shall be a unit price for each set of bumpers (2 required per set) and shall cover the cost of all labor, materials, plant, equipment, insurance, samples, and tests required and necessary to furnish and install bumpers at the locations shown or as directed and as shown on the Fire Department Standards. Said work shall also include, but not be limited to, excavation and backfill; furnishing and installing steel bar reinforcement and concrete; compaction; cleaning up; temporary restoration of sidewalk surfaces; painting; and furnishing and installing all other items necessary to complete this work; and do all work incidental thereto, all in accordance with the Contract Drawings, Specifications and Standards, and as directed by the Engineer.

(J) The contract prices bid for

ITEM NO. 6.23 FC	REMOVE EXISTING F.D.N.Y. MANHOLE FRAME & COVER AND FURNISH AND INSTALL F.D.N.Y. FRAME & COVER IN ACCORDANCE WITH F.D. STD. DWG. #140

ITEM NO. 6.23 HFC REMOVE EXISTING F.D.N.Y. SIDEWALK HANDHOLE FRAME & COVER AND FURNISH AND INSTALL F.D.N.Y. SIDEWALK HANDHOLE FRAME & COVER IN ACCORDANCE WITH F.D. STD. DWG. #143 & #144B

shall be a unit price for each and shall cover the cost of all labor, materials, plant, equipment, insurance, samples, and tests required and necessary to remove existing F.D.N.Y. manhole frame and cover or sidewalk handhole frame & cover and furnish and install manhole frame and cover or sidewalk handhole frame & cover, at the locations shown or as directed and as shown on the Fire Department Standards. Said work shall also include, but not be limited to, furnishing and installing all other items necessary to complete this work and do all work incidental thereto, all in accordance with the Contract Drawings, Specifications and Standards, and as directed by the Engineer.

(K) The contract prices bid for

ITEM NO. 6.23 FCA FURNISH AND INSTALL F.D.N.Y. MANHOLE FRAME & COVER IN ACCORDANCE WITH F.D. STD. DWG. #140
ITEM NO. 6.23 FCB FURNISH AND INSTALL F.D.N.Y. MANHOLE COVER IN ACCORDANCE WITH F.D. STD. DWG. #140
ITEM NO. 6.23 HC FURNISH AND INSTALL F.D.N.Y. SIDEWALK HANDHOLE COVER IN ACCORDANCE WITH F.D. STD. DWG. #143 AND #144B
ITEM NO. 6.23 HFCA FURNISH AND INSTALL F.D.N.Y. SIDEWALK HANDHOLE FRAME AND COVER IN ACCORDANCE WITH F.D. STD. DWG. #143 AND #144B

shall be a unit price bid for each type and shall cover the cost of all labor, materials, plant, equipment, insurance, samples, and tests required and necessary to furnish and install the Fire Department manhole frame and/or cover or furnish and install sidewalk handhole fame and/or cover, at the location shown or as directed and as shown on the Fire Department Standards. Said work shall also include, but not be limited to, the excavation of all materials of whatever nature encountered (except excavation of boulders in open cut and ledge rock); reinforcement; removal or abandonment, as required of parts of the existing Fire Communications System; breaking down and filling in of abandoned fire appurtenances; backfill; compaction; cleaning up; temporary restoration of street surfaces; installation and removal of temporary fire alarm communication facilities, if required; connections; and furnishing and installing all other items necessary to complete this work and do all work incidental thereto, all in accordance with the Contract Drawings, Specifications and Standards, and as directed by the Engineer.

(L) The contract prices bid for

ITEM NO. 6.23 RH REMOVE EXISTING F.D.N.Y. SIDEWALK HANDHOLE
ITEM NO. 6.23 RM REMOVE EXISTING F.D.N.Y. MANHOLE

shall be a unit price for each manhole or sidewalk handhole and shall cover the cost of all labor, materials, plant, equipment, insurance, samples, and tests required and necessary to remove an existing Fire Department manhole or sidewalk handhole, as specified, at the location shown or as directed. Said work shall also include, but not limited to, the removal or abandonment of an existing F.D.N.Y. manhole or sidewalk handhole; breaking down and filling in of abandoned fire appurtenances; furnishing and installing backfill; compaction; cleaning up; temporary restoration of street surfaces, if required; and furnishing and installing all other items necessary to complete this work and do all work incidental thereto, all in accordance with the Contract Drawings, Specifications and Standards, and as directed by the Engineer.

(M) The contract prices bid for

ITEM NO. 6.23 RIC RODDING AND INSTALLING FIRE ALARM CABLE IN EXISTING TELEPHONE CONDUIT SYSTEM
ITEM NO. 6.23 RR ROD AND ROPE EXISTING CONDUIT
ITEM NO. 6.23 XY FURNISH AND INSTALL POLYPROPYLENE DRAG ROPE

shall be a unit price per linear foot for drag rope with or without rodding, or cable with rodding and shall cover the cost of all labor, materials, plant, equipment, insurance, samples, and tests required and necessary to furnish and install drag rope of the type specified at the locations shown or as directed and as shown on the Fire Department Standards, including furnishing and installing all other items necessary to complete this work and do all work incidental thereto, all in accordance with the Contract Drawings, Specifications and Standards, and as directed by the Engineer.

(N) The contract prices bid for

ITEM NO. 6.23 XAPE FURNISH AND INSTALL 1/2" GALVANIZED STEEL CONDUIT POLE RISER IN ACCORDANCE WITH FIRE DEPARTMENT STANDARD DRAWING #145AA

ITEM NO. 6.23 XBPE FURNISH AND INSTALL 2" GALVANIZED STEEL CONDUIT POLE RISER IN ACCORDANCE WITH FIRE DEPARTMENT STANDARD DRAWING #145AA

shall be a unit price for each type of conduit pole riser and shall cover the cost of all labor, materials, plant, equipment, insurance, samples, and tests required and necessary to furnish and install each type of pole riser at the location shown or as directed and as shown on the Fire Department Standards. Said work shall also include, but not be limited to, connections, and furnishing and installing all other items necessary to complete this work and doing all work incidental thereto, all in accordance with the Contract Drawings, Specifications and Standards, and as directed by the Engineer.

(O) The contract price bid for

ITEM NO. 6.23 PP PAINT EXISTING FIRE ALARM POST AND/OR BOX

shall be a unit price for each fire alarm post and/or box and shall cover the cost of all labor, materials, plant, equipment, insurance, samples, and tests required and necessary to paint existing fire alarm posts and/or boxes as directed and doing all work incidental thereto, all in accordance with the Contract Drawings, Specifications and Standards, and as directed by the Engineer.

Payment will be made under:

Item No.	Item	Pay Unit
6.23 AA	FURNISH AND INSTALL FIRE ALARM POST POST IN ACCORDANCE WITH F.D. STD. DWG. #141	EACH
6.23 AB	REMOVE EXISTING FIRE ALARM POST	EACH
6.23 AC	ADJUST FIRE ALARM POST TO NEW GRADE IN ACCORDANCE WITH F.D. STD. DWG. #167	EACH
6.23 AF	FURNISH AND INSTALL FIRE DEPARTMENT POLE TERMINAL (CHIPPY) BOX IN ACCORDANCE WITH FIRE DEPARTMENT STANDARD DRAWING #145AA	EACH
6.23 BA	FURNISH AND INSTALL FIRE ALARM POST AND SUBBASE IN ACCORDANCE WITH F.D. STD. DWG. #141	EACH
6.23 BBS	FURNISH AND INSTALL 3" 90 DEGREE P.V.C. WIDE BEND, SCHEDULE 40, U.L. 651 (WITHOUT PAVEMENT EXCAVATION) IN ACCORDANCE WITH F.D. STD. DWG. #141	EACH
6.23 BBSE	FURNISH AND INSTALL 3" 90 DEGREE P.V.C. WIDE BEND, SCHEDULE 40, U.L. 651 (WITH PAVEMENT EXCAVATION) IN ACCORDANCE WITH F.D. STD. DWG. #141	EACH
6.23 BCS	FURNISH ANC INSTALL 3" P.V.C. CONDUIT, SCHEDULE 40, U.L. 651 (WITHOUT PAVEMENT EXCAVATION)	L.F.
6.23 BCSE	FURNISH AND INSTALL 3" P.V.C. CONDUIT, SCHEDULE 40, U.L. 651 (WITH PAVEMENT EXCAVATION)	L.F.
6.23 BD	FURNISH AND INSTALL 4-PAIR FIRE ALARM CABLE	L.F.

6.23 BE	FURNISH AND INSTALL FIRE DEPARTMENT MANHOLE TYPE "A" WITH FRAME AND COVER IN ACCORDANCE WITH F.D. STD. DWG. #140, #144, & #144E	EACH
6.23 BES	FURNISH AND INSTALL FIRE DEPARTMENT SLOTTED MANHOLE TYPE "A" WITH FRAME AND COVER IN ACCORDANCE WITH F.D. STD. DWG. #140, #144S & #144E	EACH
6.23 BF	FURNISH AND INSTALL FIRE DEPARTMENT POLE TERMINAL (HOFFMAN) BOX IN ACCORDANCE WITH FIRE DEPARTMENT STANDARD DRAWING #146	EACH
6.23 BFA	FURNISH AND INSTALL FIRE DEPARTMENT 48 WIRE TERMINAL BOX AND TERMINATE FIRE ALARM CABLES	EACH
6.23 BFB	FURNISH AND INSTALL FIRE DEPARTMENT 24 WIRE TERMINAL BOX AND TERMINATE FIRE ALARM CABLES	EACH
6.23 BFC	FURNISH AND INSTALL FIRE DEPARTMENT 12 WIRE TERMINAL BOX AND TERMINATE FIRE ALARM CABLES	EACH
6.23 BGR	FURNISH AND INSTALL 4" PVC CONDUIT TO 2" GALVANIZED STEEL REDUCER BUSHING AS SHOWN IN F.D. STD. DWG. #145AA	EACH
6.23 BGS	FURNISH AND INSTALL 4" P.V.C. CONDUIT, SCHEDULE 40, U.L. 651 (WITHOUT PAVEMENT EXCAVATION)	L.F.
6.23 BGSE	FURNISH AND INSTALL 4" P.V.C. CONDUIT, SCHEDULE 40, U.L. 651 (WITH PAVEMENT EXCAVATION)	L.F.
6.23 BGT	FURNISH AND INSTALL 2 – 4" P.V.C. CONDUITS, SCHEDULE 40, U.L. 651 IN ONE TRENCH (WITHOUT PAVEMENT EXCAVATION, ONE ON TOP OF THE OTHER)	L.F.
6.23 BGTE	FURNISH AND INSTALL 2 – 4" P.V.C. CONDUITS, SCHEDULE 40, U.L. 651 IN ONE TRENCH (WITH PAVEMENT EXCAVATION, ONE ON TOP OF THE OTHER)	L.F.
6.23 BH	FURNISH AND INSTALL 4" 90 DEGREE P.V.C. WIDE BEND, SCHEDULE 40, U.L. 651 (WITHOUT PAVEMENT EXCAVATION) IN ACCORDANCE WITH F.D. STD. DWG. #141 OR #145AA	EACH
6.23 BHE	FURNISH AND INSTALL 4" 90 DEGREE P.V.C. WIDE BEND, SCHEDULE 40, U.L. 651 (WITH PAVEMENT EXCAVATION) IN ACCORDANCE WITH F.D. STD. DWG. #141 OR #145AA	EACH
6.23 BP	FURNISH AND INSTALL FIRE ALARM PEDESTAL BUMPERS (2 REQUIRED PER SET) IN ACCORDANCE WITH F.D. STD. DWG. #168	SETS
6.23 CB	FURNISH AND INSTALL 2 – 3" 90 DEGREE P.V.C. WIDE BENDS, SCHEDULE 40, U.L. 651 IN ONE TRENCH (WITHOUT PAVEMENT EXCAVATION) IN ACCORDANCE WITH F.D. STD. DWG. #141	EACH
6.23 CBE	FURNISH AND INSTALL 2 – 3" 90 DEGREE P.V.C. WIDE BENDS, SCHEDULE 40, U.L. 651 IN ONE TRENCH (WITH PAVEMENT EXCAVATION) IN ACCORDANCE WITH F.D. STD. DWG. #141	EACH
6.23 CC	FURNISH AND INSTALL 2 – 3" P.V.C. CONDUITS, SCHEDULE 40, U.L. 651 IN ONE TRENCH (WITHOUT PAVEMENT EXCAVATION, ONE ON TOP OF THE OTHER)	L.F.
6.23 CCE	FURNISH AND INSTALL 2 – 3" P.V.C. CONDUITS, SCHEDULE 40, U.L. 651 IN ONE TRENCH (WITH PAVEMENT EXCAVATION, ONE ON TOP OF THE OTHER)	
6.23 DC	FURNISH AND INSTALL 10 PAIR FIRE ALARM CABLE	L.F.
6.23 DDA	FURNISH AND INSTALL 15 PAIR FIRE ALARM CABLE	L.F.
6.23 DDB	FURNISH AND INSTALL 20 PAIR FIRE ALARM CABLE	L.F.
6.23 DDC	FURNISH AND INSTALL 25 PAIR FIRE ALARM CABLE	L.F.
6.23 DDD	FURNISH AND INSTALL 30 PAIR FIRE ALARM CABLE	L.F.
6.23 DDE	FURNISH AND INSTALL 40 PAIR FIRE ALARM CABLE	L.F.
6.23 DF	FURNISH AND INSTALL 45 PAIR FIRE ALARM CABLE	L.F.
6.23 DG	FURNISH AND INSTALL 50 PAIR FIRE ALARM CABLE	L.F.
6.23 DH	FURNISH AND INSTALL 55 PAIR FIRE ALARM CABLE	L.F.
6.23 DJ	FURNISH AND INSTALL 60 PAIR FIRE ALARM CABLE	L.F.

6.23 EB	FURNISH AND INSTALL FIRE DEPARTMENT MANHOLE TYPE "B" WITH FRAME & COVER IN ACCORDANCE WITH F.D. STD. DWG. #140, #144, #144C, #144CC, & #144E	EACH
6.23 FC	REMOVE EXISTING F.D.N.Y. MANHOLE FRAME & COVER AND FURNISH AND INSTALL F.D.N.Y. FRAME & COVER IN ACCORDANCE WITH F.D. STD. DWG. #140	EACH
6.23 FCA	FURNISH AND INSTALL F.D.N.Y. MANHOLE FRAME & COVER IN ACCORDANCE WITH F.D. STD. DWG. #140	EACH
6.23 FCB	FURNISH AND INSTALL F.D.N.Y. MANHOLE COVER IN ACCORDANCE WITH F.D. STD. DWG. #140	EACH
6.23 HC	FURNISH AND INSTALL F.D.N.Y. SIDEWALK HANDHOLE COVER IN ACCORDANCE WITH F.D. STD. DWG. #143 AND #144B	EACH
6.23 HFC	REMOVE EXISTING F.D.N.Y. SIDEWALK HANDHOLE FRAME & COVER AND FURNISH AND INSTALL F.D.N.Y. SIDEWALK HANDHOLE FRAME & COVER IN ACCORDANCE WITH F.D. STD. DWG. #143 & #144B	EACH
6.23 HFCA	FURNISH AND INSTALL F.D.N.Y. SIDEWALK HANDHOLE FRAME AND COVER IN ACCORDANCE WITH F.D. STD. DWG. #143 AND #144B	EACH
6.23 HH	FURNISH AND INSTALL F.D.N.Y. SIDEWALK HANDHOLE WITH FRAME AND COVER IN ACCORDANCE WITH F.D. STD. DWG. #143, #144B, & #144E	EACH
6.23 HHS	FURNISH AND INSTALL F.D.N.Y. SIDEWALK SLOTTED HANDHOLE WITH FRAME AND COVER IN ACCORDANCE WITH F.D. STD. DWG. #144E & #144BS	EACH
6.23 PP	PAINT EXISTING FIRE ALARM POST AND/OR BOX	EACH
6.23 RH	REMOVE EXISTING F.D.N.Y. SIDEWALK HANDHOLE	EACH
6.23 RIC	RODDING AND INSTALLING FIRE ALARM CABLE IN EXISTING TELEPHONE CONDUIT SYSTEM	L.F.
6.23 RM	REMOVE EXISTING F.D.N.Y. MANHOLE	EACH
6.23 RR	ROD AND ROPE EXISTING CONDUIT	L.F.
6.23 XAPE	FURNISH AND INSTALL 1/2" GALVANIZED STEEL CONDUIT POLE RISER IN ACCORDANCE WITH FIRE DEPARTMENT STANDARD DRAWING #145AA	EACH
6.23 XB	FURNISH AND INSTALL 2" GALVANIZED STEEL CONDUIT (WITHOUT PAVEMENT EXCAVATION)	L.F.
6.23 XBB	FURNISH AND INSTALL 2" GALVANIZED STEEL 90 DEGREE BEND (WITHOUT PAVEMENT EXCAVATION) IN ACCORDANCE WITH F.D. STD. DWG. #145BB	EACH
6.23 XBBE	FURNISH AND INSTALL 2" GALVANIZED STEEL 90 DEGREE BEND (WITH PAVEMENT EXCAVATION) IN ACCORDANCE WITH F.D. STD. DWG. #145BB	EACH
6.23 XBE	FURNISH AND INSTALL 2" GALVANIZED STEEL CONDUIT (WITH PAVEMENT EXCAVATION)	L.F.
6.23 XBPE	FURNISH AND INSTALL 2" GALVANIZED STEEL CONDUIT POLE RISER IN ACCORDANCE WITH FIRE DEPARTMENT STANDARD DRAWING #145AA	EACH
6.23 XC	FURNISH AND INSTALL 3" GALVANIZED STEEL CONDUIT (WITHOUT PAVEMENT EXCAVATION)	L.F.
6.23 XCE	FURNISH AND INSTALL 3" GALVANIZED STEEL CONDUIT (WITH PAVEMENT EXCAVATION)	L.F.
6.23 XY	FURNISH AND INSTALL POLYPROPYLENE DRAG ROPE	L.F.

SECTION 6.24 - Asphaltic Concrete Sidewalk

6.24.1. INTENT. This section describes Asphaltic Concrete Sidewalk.

6.24.2. DESCRIPTION.

(A) Asphaltic Concrete Sidewalk shall consist of a course of fine asphaltic concrete, two (2") inches in thickness, after compaction, laid on a three (3") inch foundation course of screenings.

(B) Asphaltic Concrete Mowing Strip shall consist of a course of fine asphaltic concrete, two and one-half (2-1/2") inches in thickness, after compaction, laid on a three (3") inch foundation course of screenings.

6.24.3. MATERIALS. Fine asphaltic concrete shall comply with the requirements of Section 3.01, subject to **Subsection 6.24.4.(E)** hereinbelow.

Screenings shall comply with the requirements of **Section 2.02** for Type 1, Grade B, Table 2.02-II, Screenings.

Preformed joint filler shall comply with the requirements of Type IV, **Section 2.15**.

Lumber for side and end forms, to remain in place, shall have a nominal thickness of two (2") inches and a depth equal to the combined thickness of compacted surface and foundation courses.

6.24.4. METHODS.

(A) Excavation, preparation of subgrade and placement of the foundation course (except for thickness) shall comply with **Subsections 4.13.4.(A)** and **4.13.4.(B)**.

(B) Prior to placing the foundation course, side and end forms shall be installed with tops set to the proposed sidewalk grade. Forms shall be securely anchored and braced to prevent any movements or changes in sidewalk width or alignment during construction operations. Forms shall be left in place at the completion of sidewalk construction.

(C) The Contractor shall remove all braces, anchors and supports from forms and backfill behind forms after sidewalk is completed.

(D) After compaction of the foundation course to the required thickness and to the satisfaction of the Engineer, the surface course shall be laid in accordance with the applicable requirements of **Subsection 4.02.4**.

(E) The roller used for compacting the surface course shall be of sufficient weight to insure that the density of the compacted mixture, determined in accordance with A.S.T.M. Designation D 1188, shall not be less than 90% of the theoretical maximum density. When the weight of a furnished roller is less than five (5) tons, the asphalt cement content of the surface mixture shall be increased one-half (1/2) percent.

(F) Immediately after spreading or as soon thereafter as is practicable without causing undue displacement, the surface course shall be thoroughly compacted by rolling with an approved tandem steel-wheeled roller. Rolling shall be progressed longitudinally and shall be continuous from commencement to final completion of compression at a speed not exceeding three (3) m.p.h. until no further compression results, the mixture has cooled, no marks show under the roller, and the surface is smooth and free from all depressions, waves, bunches and unevenness. The final surface shall be tested with an approved straightedge, ten (10') feet long, or approved surface testing machine, laid parallel with the center line of the sidewalk and any irregularity exceeding one-quarter (1/4") inch shall be immediately corrected to the satisfaction of the Engineer.

(G) Preformed joint filler shall be placed between asphaltic concrete sidewalk and abutting curbs, non-bituminous sidewalks and buildings. Filler shall be one-quarter (1/4") inch or one-half (1/2") inch thick and the width shall equal the depth of the surface plus the foundation course.

6.24.5. MEASUREMENT. The quantity to be measured for payment shall be the number of square feet of asphaltic concrete surface course in the asphaltic concrete sidewalk, as placed in the work.

6.24.6. PRICE TO COVER. The contract price bid per square foot shall cover the cost of furnishing all labor, materials, plant, equipment, insurance, and necessary incidentals required and completing the work, including but not limited to the furnishing and incorporation of all forms and preformed joint filler, and the furnishing of samples for testing, in accordance with the Contract Drawings, the specifications and the directions of the Engineer.

Payment will be made under:

Item No.	Item	Pay Unit
6.24	ASPHALTIC CONCRETE SIDEWALK	S.F.
6.24 MS	2-1/2" ASPHALTIC CONCRETE MOWING STRIP	S.F.

SECTION 6.25 - Temporary Signs

6.25.1. INTENT. This section describes the work of providing Temporary Signs.

6.25.2. DESCRIPTION. The work shall consist of the fabrication, furnishing, installation, erection, assembly and maintenance of temporary warning, detour, regulatory, guide and directional signs required to properly stage the work and maintain traffic and shall include the furnishing and incorporation of sign supports and posts; the furnishing and installation of all fastening devices and miscellaneous appurtenances; and the relocation, removal and disposal of signs or sign assemblies.

6.25.3. MATERIALS AND METHODS. All materials and the details of fabrication, location, relocation, and assembly shall be as shown on the Contract Drawings, outlined in the Special Provisions, and in accordance with the applicable standards of the New York City Department of Transportation, Division of Traffic Operations or the National Manual on Uniform Traffic Control Devices for Streets and Highways (National MUTCD) plus the New York State Supplement (NYS Supplement), where applicable, the following requirements, and as approved by the Engineer.

Sign panels may be made of aluminum or plywood except when placed on Type III Breakaway Barricades, then sign material shall conform to the requirements for aluminum panels. Aluminum sign panels shall be 0.025" thick. Plywood sign panels and plywood battens shall be 3/4" thick, exterior grade.

The back of each sign shall be clearly labeled with the Contractor's Company Logo, the Agency Name (NYCDDC) and the Contract Number, each from 1-1/2 to 2 inches in height, as approved by the Engineer.

The erection of the signs shall comply with the applicable details of Drawing Nos. SD-225A, SD-225B and SD-225F of the Division of Traffic Operations, and the directions of the Engineer.

Where signs are mounted on barricades, as required, or as approved by the Engineer, the signs shall be sturdily fastened to the barricades using adequate metal brackets and supports and a minimum of three (3) bolts with nuts along the upper and lower portions of the signs (6 bolts total), comparable to the installation of signs on lampposts as shown on Traffic Drawing No. SD-225B, all as approved by the Engineer. All signs shall be erected plumb and facing in the proper direction and angle as directed by the

Engineer. The use of wire, twine or other similar temporary measures to fasten the signs to the barricades will not be permitted.

No painted signs will be permitted and all orange reflective sheeting applied to rigid substrates shall be one of the following listed fluorescent orange reflective sheeting materials or an approved equal:

Scotchlite Durable Fluorescent Diamond Grade Sheeting 3924 F/G Orange as manufactured by the 3M Company, Traffic Control Materials Division. Diamond shaped signs shall use 3924F reflective sheeting. Square or rectangular shaped signs shall use 3924G reflective sheeting.

Stimsonite Florescent Orange High-Performance Grade Retroreflective Sheeting No. 4380.

Approved reflective sheeting shall be installed in accordance with the manufacturer's written instructions, and to the satisfaction and approval of the Engineer. Intermixing of fluorescent orange sheeting signs with non-fluorescent orange flexible "roll-up" signs within the same series of signs will not be allowed.

All temporary regulatory and/or “NO PARKING - CONSTRUCTION” signs used during the construction period are to be furnished by the Contractor, as required. The Contractor shall install these signs where directed by the Engineer, and, when no longer required, shall carefully remove these signs and deliver them to the New York City Department of Transportation, Bureau of Traffic. A credit of fifty (50) dollars will be taken for each sign not so delivered.

6.25.4. MEASUREMENT. The quantity to be measured for payment shall be the number of square feet of legend face of signs initially furnished and installed. The area of relocated signs will not be measured for payment.

6.25.5. PRICE TO COVER. The contract price per square foot shall cover the cost of all labor, materials, plant, equipment, insurance, and necessary incidentals required and completing the work in accordance with the Contract Drawings, the specifications and the directions of the Engineer.

Payment will be made under:

Item No.	Item	Pay Unit
6.25 RS	TEMPORARY SIGNS	S.F.

SECTION 6.26 - Timber Curb

6.26.1. INTENT. This section describes the construction and placement of Timber Curb.

6.26.2. DESCRIPTION. The work shall include the furnishing of all necessary timber, lumber, reflective material, anchoring and fastening materials; drilling and cutting, as required; paints and painting; and constructing, placing, maintaining and disposing of timber curb as required.

6.26.3. MATERIALS. Timber and lumber shall be dense, structural grade Douglas Fir or Southern Yellow Pine, conforming to the requirements of Section 2.40.

Lag screws shall be 3/4” diameter by ten (10”) inches long. Anchor spikes shall be one (1”) inch diameter by not less than twenty-four (24”) inches long. Splice spikes shall be 40d.

Striping shall be done with white and orange enamel as required by the New York City Department of Transportation’s Standard Details of Construction Standard Drawing.

Reflective material shall conform to the requirements of ASTM Designation B 589 "Standard Specification of Refined Palladium."

6.26.4. METHODS. Construction of timber curb shall comply with the Department's Standard Dwg. H-1012 or as shown on the Contract Drawings.

Spike holes in 12" x 12" timber and in the 2" x 8" splice plates shall be predrilled.

Reflective material shall be wrapped around posts, lapped and tacked on a side opposite the traffic face or side of post.

After assembly, the front and rear faces and the top of 12" x 12" timbers shall be painted with alternate white and orange stripes. Two (2) coats of each color shall be used. White stripes shall be thirteen (13") inches wide and orange stripes shall be eleven (11") inches wide.

Timber curb units shall be placed where shown or directed with traffic faces flush. Abutting ends of units shall be spliced. Unless otherwise directed by the Engineer, both ends of all units shall be spiked into the ground or surface material.

Timber curb shall be maintained in first class condition at all times to the satisfaction of the Engineer. Maintenance shall include the replacement of damaged components; refastening; repainting; anchoring or re-anchoring; replacing and re-affixing reflective material; and re-splicing; all, when necessary or ordered and directed by the Engineer.

At the completion of the work or when directed by the Engineer, timber curb shall be removed and disposed of away from the work site.

6.26.5. MEASUREMENT. The quantity to be measured for payment shall be the number of linear feet of timber curb constructed and placed, complete, based upon the summation of the lengths of the individual units so constructed and placed measured along the center line on top of the 12" x 12" timbers.

Payment will be made for timber curb only for the initial installation at any location. Whenever timber curbs are moved to a new location, as required by the Contract Drawings or directed by the Engineer, payment will be made in the same manner as if it were an initial installation. Minor movement of the timber curbs from one side of the roadway to the other side, or rearrangement within a work area will <u>not</u> be considered as a movement to a new location and will <u>not</u> entitle the Contractor to additional payment.

No payment will be made: for movements of curbs made for the Contractor's convenience; for movement of curbs at a given location at the end of a work period and subsequent replacement at the same location at the beginning of the next work period; for movement of curbs at a given location during a work period and subsequent replacement at the same location during the same work period; or for the interchanging of curbs between initial installations.

6.26.6. PRICES TO COVER. The contract prices bid per linear foot for Timber Curb shall cover the cost of furnishing all labor, materials, plant, equipment, insurance, and necessary incidentals required and completing the work in accordance with the Contract Drawings, the specifications and the directions of the Engineer.

Where there is no scheduled item for Timber Curb, the cost of furnishing, installation, maintenance, relocation, and subsequent removal of Timber Curb as required shall be deemed included in the unit price bid for the Maintenance and Protection of Traffic item.

Payment will be made under:

Item No.	Item	Pay Unit
6.26	TIMBER CURB	L.F.

SECTION 6.27 - Demolition of Structures

6.27.1. INTENT. This section describes the demolition of buildings and other structures.

6.27.2. DESCRIPTION. In addition to furnishing all necessary labor, materials, plant, equipment, and necessary incidentals required, the work shall include the demolition, removal and disposal of entire or portions of buildings or other structures, as indicated on the Contract Drawings, specified or directed by the Engineer, together with all appurtenances, sheds, extensions, fences, railings, stoops, steps, porches, areaways, chimneys, cellars, sub-cellars, debris and refuse of all kinds, and other miscellaneous structures.

6.27.3. GENERAL.

(A) LAWS, PERMITS, ETC.

The Contractor shall comply with all laws, ordinances, statutes, rules and regulations relating to the demolition of buildings or structures; the removal and disposal of materials resulting from demolition operations; the protection of adjacent properties and the general public; and the furnishing and maintenance of passageways, guard fences and other protective facilities. He shall obtain all required permits and licenses, pay all fees and give all notices necessary for the prosecution of the work.

(B) DISPOSAL

All materials resulting from demolition operations or required to be excavated in connection with such operations, except as otherwise provided or directed, shall be disposed of by the Contractor away from the demolition site and the site of the contract work. Said materials shall not be dumped, placed, stored or disposed of within the limits of any existing or projected public street or road. The burning of debris or other demolition materials will not be permitted except as approved and authorized by the New York City Fire Department, the New York State Department of Environmental Conservation, and the Engineer.

(C) CLEAN AIR ACT

The U.S. Environmental Protection Agency (E.P.A.) requires that, under the Clean Air Act and its implementing regulations, New York City agencies must notify the E.P.A. at least ten (10) days prior to demolition of any institutional, commercial or industrial building in which asbestos is used for insulation or fireproofing. Under the demolition provisions of the National Emissions Standards for Hazardous Air Pollutants Program, the U.S. Government exercises jurisdiction over the uses of asbestos, beryllium and mercury, including their disposal.

These regulations specify that E.P.A. shall be notified of such information as to the methods of demolition to be employed, description and location of the building(s) to be demolished, and scheduled starting and completion dates. Advance notification enables E.P.A. to send observers to the site to ensure that proper demolition procedures are being followed.

The Contractor shall therefore notify the Engineer at least twenty (20) days in advance of any building demolition work to be performed under this contract, furnishing him the information required above, so that the Engineer can notify the E.P.A. at least ten (10) days prior to building demolition work, of the said information.

(D) DAMAGES

The Contractor shall be responsible for all damages resulting from and due to his demolition operations. Said responsibility shall include, but not be limited to, the grounds; buildings; structures; and portions of buildings or structures which are adjacent to the demolition site and are to remain. No additional payment or compensation will be made or allowed the Contractor for costs incurred for repairs and replacements required to satisfactorily remedy the aforesaid damages or for the settlement of any claims resulting therefrom.

(E) RODENT EXTERMINATION

When required by any code, law, ordinance, statute, rule or regulation, the Contractor shall employ a licensed exterminator to rid a building or structure of rats; file an extermination certificate with the regulating agency; and submit a copy of the said certificate to the Engineer, before starting demolition operations.

(F) SALVAGE

The City assumes no responsibility for the condition or presence of salvable materials in or on the premises. All damage to or loss of salvable materials, whether by reason of fire, theft or other happening, shall be at the risk of the Contractor and no such loss or damage shall relieve him from any obligation under the contract or form the basis of any claim against the City.

(G) FIRE PROTECTION, ETC.

The Contractor shall furnish, employ and pay for all necessary appliances and watchmen required for the adequate protection of the work against fire and to safeguard existing structures and the public. He shall at all times maintain adequate facilities for the thorough saturation of all debris and materials with water to the extent required to prevent dust arising from the work. All water used including temporary piping, connections, permits therefor, and removal of piping, when directed, shall be provided and paid for by the Contractor.

(H) DISCONNECTING UTILITY AND PUBLIC SERVICES

a. Prior to commencement of work, the Contractor shall give notice to the New York City Department of Citywide Administrative Services to have the steam, gas and electricity to the buildings to be demolished, disconnected by the utility companies owning the services. The Contractor shall obtain certifications from the utilities that the services have been terminated, and shall submit them to the Engineer, for his approval, prior to commencement of demolition operations.

b. The Contractor shall seal or plug all storm or sanitary sewers or other connections to the sewers leading from the structure to be demolished. He shall disconnect all water services and shall make the necessary arrangements with the New York City Department of Environmental Protection, Bureau of Water and Sewer Operations, to destroy or plug the tap in the City water main. The Contractor shall obtain all permits necessary to do such work prior to the commencement of demolition. All such work shall be done in full accordance with the rules and regulations of, and to the satisfaction of the City of New York Bureaus having jurisdiction thereof.

c. The Contractor shall maintain and preserve all utilities, other than those covered by paragraphs a and b above, traversing the premises. He shall maintain in a safe condition all street openings made by him, and shall backfill and tamp them.

d. All expenses arising from or in connection with the performance of the provisions of paragraphs b and c above shall be borne by the Contractor.

(I) BLASTING

Blasting operations, when permitted by the Engineer, shall be conducted in strict conformity to all City and State ordinances and regulations relative thereto and to the storage and use of explosives. All damage to existing structures shall be promptly repaired by the Contractor at no cost to the City.

(J) CITY MONUMENTS

The Contractor shall not progress his demolition operations within five (5') feet (or such greater distance which the Engineer shall direct) of any City monument which may be within the limits of or be disturbed by the herein contemplated work, nor in any manner disturb the same, but shall cease work at such places until the said monuments have been referenced and reset or otherwise disposed of, except upon special permit from the Commissioner, in accordance with the City ordinances therefor.

After permission is given to remove any monument, the Contractor shall take up and preserve such monument, and if required remove same to the nearest Department yard. The Contractor shall preserve all benchmarks, reference points and stakes placed or established on the line of the work until authorized to remove the same.

6.27.4. METHODS.

(A) EXTENT OF REMOVAL

Within the limits shown, all structures and appurtenances shall be completely removed except that foundation walls shall be removed to a depth of two (2') feet below new subgrade of pavement. Basement, vault, yard, garage and areaway floors shall be broken up to prevent accumulation of water and to expose voids and hollows beneath the floors. No piece of masonry or concrete, when broken, shall exceed eighteen (18") inches in its greatest dimension. When the top of an existing floor lies above or less than eighteen (18") inches below the proposed final surface, the said floor shall be removed and disposed of by the Contractor away from the site or at such location on the site as the Engineer shall direct.

(B) PARTIAL DEMOLITION

Where the demolition consists of only a portion of a building or structure, the Contractor shall cooperate with the owner of the remaining portion to the end that annoyance and inconvenience may be minimized. The Contractor shall close the open ends of buildings which are partially demolished with construction consisting of studs, sheathing and building paper. Supporting members and framing shall be furnished and installed and foundations shall be constructed to support remaining construction in position. Construction shall be of a strength and type to meet the requirements of the New York City Building Code and to provide for the loadings specified therein. The construction materials for the structural supports shall be of the same materials as the existing supporting members to which they frame or with which they share the load; or they shall be consistent therewith. The Contractor may use salvaged lumber for sheathing provided that such lumber is sound and suitable, in the opinion of the Engineer, for the purpose. New timber and lumber shall be used for all other purposes. The building paper used shall weigh at least 30 pounds per 100 square feet and shall be completely saturated with asphalt. All work must meet the requirements of the Engineer and must have his approval. Workmanship shall be of the best and the finished work shall be neat in appearance.

(C) DELAYS IN VACANCY

A building or structure shall be demolished as it becomes vacant. There is no guarantee as to when such vacancy will occur. The Contractor will be notified when a vacancy occurs. The Contractor agrees that he has taken into consideration and made allowances for delays and expenses resulting from the uncertainty of the time when a building or structure may be vacated and made available for demolition. He shall have no claim against the City for such delays or expenses.

(D) REMOVAL AND DISPOSAL OF MATERIALS

All materials in buildings or structures, demolished hereunder, shall become the property of the Contractor, unless otherwise provided, and shall be removed and disposed of away from the site by him, including all wood, plaster, lath and debris of every kind which has been allowed to fall and accumulate in the cellars, vaults and areaways of a demolished building or structure. Before issuance of a final

certificate, the Contractor shall remove all falsework, temporary structures, plant of all description, equipment, and debris of every nature from the demolition area, and dispose of them away from the site.

(E) BACKFILL

All areas of demolition shall be backfilled to a level of two (2') feet below the top of proposed curb, or to such elevation as the Engineer shall direct, with material consisting of earth and not more than fifty (50) percent of broken stone, brick masonry, and/or broken concrete. This fill shall be graded from coarse to fine with no single piece having a dimension greater than eighteen (18") inches, and it shall be deposited so that no voids will occur. Wood, plaster, lath or any such material shall not be used. All material not acceptable for backfill shall be removed from the site. The depth between two (2') feet below top of curb or directed elevation and the top of curb or directed elevation shall be backfilled with acceptable fill material consisting of clean earth, clean ashes, clean cinders, broken stone and broken masonry; all of which shall be free from muck, garbage, rubbish and any other perishable or objectionable material. This fill shall be graded uniformly from coarse to fine and deposited so that no voids will occur. It shall have no material larger than three (3") inches in its greatest dimension. No frozen material will be permitted to be used for backfill.

(F) CLEAN UP

The demolition areas and the portions of the streets affected by the work shall be cleaned of all materials resulting from or used in the work to be done hereunder and shall be left in a condition satisfactory to the Engineer.

6.27.5. BREAKDOWN OF LUMP SUM PRICE. Where the demolition work involves more than one parcel, the Contractor shall submit a breakdown of the lump sum price bid which shall indicate the cost of demolition of each of the parcels. When approved by the Engineer, such breakdown shall be used as a basis for payment for all or part of the work or demolition to be done hereunder.

6.27.6. PAYMENT. The Contractor will be paid the lump sum price bid for completing all of the work required to be done hereunder. In the event of deletion of parcels by the Engineer or if demolition of a parcel is performed by others, the lump sum price bid will be adjusted in accordance with the approved breakdown required above.

6.27.7. PRICE TO COVER. The lump sum price bid or the adjusted lump sum price shall cover the cost of furnishing all labor, materials, plant, equipment, insurance, and necessary incidentals required and completing the work in accordance with the Contract Drawings, the specifications and the directions of the Engineer.

Payment will be made under:

Item No.	Item	Pay Unit
6.27	DEMOLITION OF STRUCTURE	L.S.

SECTION 6.28 A - Timber Barricades

6.28A.1. INTENT. This section describes the work to be done in connection with Timber Barricades.

6.28A.2. DESCRIPTION. The work shall consist of the construction, installation, erection, placement, maintenance, removal and disposal of lighted and unlighted timber barricades. It shall include the furnishing and incorporation, as required, of all timber, lumber, fastenings, anchors, reflectorizing

materials, battery operated flashers, and other warning devices; all necessary excavation and backfilling; and paints and painting.

6.28A.3. MATERIALS. Timber and lumber shall be dense, structural grade Douglas Fir or Southern Yellow Pine, conforming to the requirements of Section 2.40. (See New York City Department of Transportation's Standard Details of Construction Standard Drawing No. H-1013).

Reflectorizing materials shall conform to the requirements of ASTM Designation B 589 "Standard Specification of Refined Palladium."

Battery operated flashing units shall be as approved by the Engineer.

All other unspecified materials shall be as approved by the Engineer.

6.28A.4. METHODS. Lighted or unlighted timber barricades shall be placed at the locations shown on the Contract Drawings or designated by the Engineer.

Unless otherwise shown on the Contract Drawings or directed by the Engineer, barricades shall be constructed, installed, erected, placed, reflectorized and lighted in conformity with the standards of the Department.

At the completion of the work or when directed by the Engineer, barricades shall be removed and disposed of away from the work site.

Barricades at all times shall be maintained in a condition satisfactory to the Engineer. Maintenance shall consist of the replacement of all damaged or worn out components; repainting, as required or directed; replacement of reflectorizing materials; and general rehabilitation to keep barricades in good condition during the life of the contract.

When barricades are required to be lighted, the lighting shall be by battery operated flashing units.

6.28A.5. MEASUREMENT AND PAYMENT. The quantity to be measured for payment shall be the number of linear feet of lighted and unlighted timber barricades installed in the work, complete, based on the summation of the lengths of individual units, measured along the center line on the face of the top rail between the ends of each unit.

Payment will be made for lighted or unlighted barricades only for the initial installation at any location. Whenever barricades are moved to a new location, as required by the Contract Drawings or directed by the Engineer, payment will be made in the same manner as if it were an initial installation. Minor movement of the barricades from one side of the roadway to the other side, or rearrangement within a work area will <u>not</u> be considered as a movement to a new location and will not entitle the Contractor to additional payment.

No payment will be made: for movements of barricades made for the Contractor's convenience; for movement of barricades at a given location at the end of a work period and subsequent replacement at the same location at the beginning of the next work period; for movement of barricades at a given location during a work period and subsequent replacement at the same location during the same work period; or for the interchanging of barricades between initial installations.

6.28A.6. PRICES TO COVER. The contract prices bid per linear foot for lighted and for unlighted barricades shall cover the cost of furnishing all labor, materials, plant, equipment, insurance, and necessary incidentals required and completing the work in accordance with the Contract Drawings, the specifications and the directions of the Engineer.

Where there is no scheduled item for Timber Barricades, the cost of furnishing, installation, maintenance, relocation, and subsequent removal of Timber Barricades as required shall be deemed included in the unit price bid for the Maintenance and Protection of Traffic item.

Payment will be made under:

Item No.	Item	Pay Unit
6.28 AA	LIGHTED TIMBER BARRICADES	L.F.
6.28 AB	UNLIGHTED TIMBER BARRICADES	L.F.

SECTION 6.28 B - Type III Breakaway Barricades (Alternate A or Alternate B)

6.28B.1. INTENT. This section describes the work to be done in connection with Type III Breakaway Barricades.

6.28B.2. DESCRIPTION. The work shall consist of the construction, installation, erection, placement, maintenance, removal and disposal of lighted and unlighted Type III breakaway barricades (Alternate A or Alternate B). It shall include, but not be limited to, the furnishing and incorporation, as required, of all barricade materials, fastenings, reflectorizing materials, lamps, bulbs, battery operated flashers and other warning devices.

6.28B.3. MATERIALS. All materials used for Type III Breakaway Barricades shall conform to the materials details shown on the detail drawings for the barricade used. (See New York City Department of Transportation's Standard Details of Construction Standard Drawing No. H-1038). Water (H_2O) calcium chloride ($Ca\ Cl_2$) mixture shall be used for ballast in the Alternate A Barricade and shall be capable of resisting freezing to -40°F (-40°C). Calcium chloride anti-freeze will not be required from May 15 to October 1, and these dates may be extended by the Engineer with a written notice to the Contractor.

Battery operated flashing units shall be as approved by the Engineer.

All other unspecified materials shall be as approved by the Engineer.

6.28B.4. METHODS. Lighted or unlighted Type III Breakaway Barricades shall be placed at the locations shown on the Contract Drawings or designated by the Engineer.

The Type III Breakaway Barricades shall be fabricated to the dimensions shown on the detail drawings. The aluminum face panels shall be attached to the plastic frame with four (4) 1" No. 14 pan head metal screws for each panel.

At the completion of the work or when directed by the Engineer, barricades shall be removed and disposed of away from the work site.

Barricades, at all times, shall be maintained in a condition satisfactory to the Engineer. Maintenance shall consist of the replacement of all damaged or worn out components; replacement of reflectorizing materials; and general rehabilitation to keep barricades in good condition during the life of the contract.

When barricades are required to be lighted, the lighting shall be by battery operated flashing units which shall be so mounted to accommodate the breakaway design.

6.28B.5. MEASUREMENT AND PAYMENT. The quantity to be measured for payment shall be the number of linear feet of lighted and unlighted Type III breakaway barricades installed in the work, complete, based on the summation of the lengths of individual units, measured along the center line on the face of the top rail between the ends of each unit.

Payment will be made for lighted or unlighted barricades only for the initial installation at any location. Whenever barricades are moved to a new location, as required by the Contract Drawings or directed by the Engineer, payment will be made in the same manner as if it were an initial installation. Minor movement of the barricades from one side of the roadway to the other side, or rearrangement within a work area will not be considered as a movement to a new location and will not entitle the Contractor to additional payment.

No payment will be made: for movements of barricades made for the Contractor's convenience; for movement of barricades at a given location at the end of a work period and subsequent replacement at the same location at the beginning of the next work period; for movement of barricades at a given location during a work period and subsequent replacement at the same location during the same work period; or for the interchanging of barricades between initial installations.

6.28B.6. PRICES TO COVER. The contract prices bid per linear foot for lighted and for unlighted barricades shall cover the cost of furnishing all labor, materials, plant, equipment, insurance, and necessary incidentals required and completing the work in accordance with the Contract Drawings, the specifications and the directions of the Engineer.

Where there is no scheduled item for Type III Breakaway Barricades, the cost of furnishing, installation, maintenance, relocation, and subsequent removal of Type III Breakaway Barricades as required shall be deemed included in the unit price bid for the Maintenance and Protection of Traffic item.

Payment will be made under:

Item No.	Item	Pay Unit
6.28 BA	LIGHTED TYPE III BREAKAWAY BARRICADES	L.F.
6.28 BB	UNLIGHTED TYPE III BREAKAWAY BARRICADES	L.F.

SECTION 6.29 (VACANT)

SECTION 6.30 - Beam Type Guide Rail and Mall Barrier

6.30.1. INTENT. This section describes Beam Type Guide Rails and Mall Barriers.

6.30.2. DESCRIPTION. Beam Type Guide Rails and Mall Barriers shall consist of steel rail elements affixed to and supported by structural steel beam posts with timber block-outs. Except as otherwise shown on the Contract Drawings, specified or directed by the Engineer, the material, manufacture, fabrication and installation or erection of rails and barriers shall be in compliance with latest revision of the New York State Department of Transportation (N.Y.S.-DOT) Standard Sheet Nos. M606-8, M606-9 and M606-10, with timber blockouts.

Relocated beam type guide rails shall consist of removing existing beam type guide rail in its entirety, cleaning the posts to the satisfaction of the Engineer, storing, and reinstalling the beam type guide rail where shown on the Contract Drawings or as directed by the Engineer. The Contractor shall be required to furnish all additional materials as may be required to reinstall the guide rail with new timber block-outs, including the replacement of parts that are missing or damaged as a result of the Contractor's operations. All material furnished shall comply with the requirements of **Subsection 6.30.3.** and shall be included in the price bid for this item.

6.30.3. MATERIALS. Rail elements and terminal sections shall be No. 12 ga. or heavier, and shall meet the requirements of A.A.S.H.T.O. Designation M 180.

Posts, plates and anchorage units shall be as detailed on N.Y.S.-DOT Standard Sheets and shall conform to the requirements of A.S.T.M. Designation A 36.

Fastening hardware shall meet the requirements of A.S.T.M. Designation A325 – Type 1 or 2.

Rail elements, terminal sections and posts, after proper shaping and fabrication for assembly, shall be galvanized in accordance with A.S.T.M. Designation A 123. No punching, drilling, cutting or welding will be permitted after galvanizing. Fastening hardware (bolts, nuts and lock washers) shall be galvanized in accordance with A.S.T.M. Designation A 153.

Concrete for end assembly anchors shall be Class C25, Type IIA, conforming to the requirements of Section 3.05. An approved air-entraining agent shall be added at the time that concrete is mixed. Cement shall be Type II Portland; sand - Type 1A; coarse aggregate - Type 1, Grade B or Type 2, Size No. 57.

Reinforcement shall comply with A.S.T.M. Designation A 615, Grade 40.

Wood and Timber Posts and Timber Blockouts shall conform to the requirements of Section 2.38.

The Contractor shall obtain from the manufacturer and submit to the Engineer certificates of compliance with the foregoing references. Said certificates shall in no way abridge the right of the Engineer to require or take samples for testing.

6.30.4. SHOP DRAWINGS. The Contractor shall prepare and submit shop drawings to the Engineer for his approval. No installation work shall be started until the said approval has been obtained. Drawings shall show the relative positioning of mall barriers with respect to the proposed malls; the spacing of posts, including those in the adjustment panels (approximately midway between ends of malls); all necessary marking and dimensioning; and the details of fabrication and geometry of the special rail elements to be used in the adjustment panels.
The Contractor shall be responsible for the proper fit of all components and completed installations.

6.30.5. CURVED RAIL ELEMENTS. Straight lengths of rail elements may be used between posts when the radius of curvature of a line passing through the center line of installed posts is equal to or greater than 150 feet. When the said radius of curvature is less than 150 feet, rail elements shall be shop curved to match the actual radius of curvature.

6.30.6. METHODS. Immediately prior to erection, the rail elements shall be inspected for damage. Bends or kinks in the railing, not specifically required by the contract documents, shall constitute sufficient cause for rejection. Straightening of such bends or kinks will not be allowed.

Erection of all guide rail, median barrier, transitions and connections shall be subject to the inspection of the Engineer who shall be given all facilities required for a visual inspection of workmanship and materials.

Field galvanizing repair shall be allowed only when the total damaged area on each piece or component is less than 2 percent of the coated surface, or 16 square inches, whichever is less. Any single piece or component with total damaged area greater than the amount specified above shall be rejected and replaced by the Contractor. Field galvanizing repair shall be done by the following method:

> Clean the damaged area by wire brushing, sand or grit blasting, or any other suitable method approved by the Engineer, to remove all loose and cracked coating. Paint the cleaned area with one brush coat or two spray coats of zinc repair material. The brand of material used shall be one which appears on the NYS Department of Transportation (DOT) approved list.

This repair procedure is allowed only for those field repairs directed by the Engineer and shall not be allowed for shop repairs. All repairs shall be made at no cost to the City.

Posts, timber block-outs, railing, mall barriers, end assemblies and rail transitions shall be erected in the position and manner indicated on the aforementioned N.Y.S.-DOT Standard Sheets, and in a manner approved by the Engineer.

Posts shall be driven vertically plumb to the required depth in such manner and by such means as to insure no damage to the galvanized coating material. Water jetting in driving posts will not be permitted. The driving shall be accomplished with approved equipment and methods that will leave the posts in their final position, free of any distortion, burring or other damage. When posts are driven through asphalt concrete or a bituminous treated material, the Contractor shall take care to prevent damage to the paved or treated areas. Large holes and voids caused by driving the posts shall be filled and compacted with a bituminous treated material or asphalt concrete similar to that damaged. The small area adjacent to the post disturbed during installation or where gaps exist at the post after pavement repairs shall be sealed with a bituminous material approved by the Engineer.

On structures and paved medians, base plates for posts shall be anchored as shown on the Contract Drawings and as specified by the Engineer. Where drilling and grouting is required, the Contractor shall take care to prevent damage to the concrete, asphalt or other paved surfaces. The proposed construction method and equipment for drilling and grouting of holes shall be submitted to the Engineer for approval before drilling and grouting operations begin. Anchoring devices shall be grouted with a cement grout material complying with **Section 3.06**.

The work of installing the guide railing system when it abuts stabilized shoulder courses shall be coordinated and progressed to provide the least disturbance between the two phases of the work.

All posts shall be aligned to a tolerance of 1/4 inch for plumb and grade line.

Rail elements shall be spliced at each post so that the rail element which is nearest on-coming traffic overlaps the element which is furthest. In the erection procedures, the free end of the rail element shall not be allowed to swing free and cantilever around the mounting bolt. The free end shall be supported in a manner approved by the Engineer while the splice bolts and mounting bolts are fastened. The rail elements shall be installed so the weight of the beam rests on the double nutted support bolt before the 5/16" mounting bolts are torqued. Before the final torquing, six of the 5/16" mounting bolts in the installation shall be selected at random and with a suitable torque wrench tightened to failure. The six readings shall be averaged, the six failure bolts replaced and all the mounting bolts in the installation torqued to 50% of the average value.

Support bolts shall be installed on all the guide rail posts except the three posts adjacent to the anchors.

During non-working hours, free ends on the approach end of the guiderail shall be dropped to the ground and pinned in a manner approved by the Engineerand no uncompleted anchorage units or heavy posts without rail will be permitted on either heavy post block-out guide rails or median barrier.

For heavy post blocked-out corrugated beam guide railing connections to walls (trailing ends), the holes for the expansion anchors shall be drilled to the depths and diameters specified by the manufactures. The holes shall be drilled with care to avoid damgae to the wall. Any damage caused by the drilling operation shall be repaired by the Contractor to the satisfaction of the Engineer, at no cost to the City.

To prevent loosening, bolt threads close to the nut shall be upset after a connection has been tightened to final position. Upset threads shall be completely sealed against corrosion by the application of an approved aluminum paint.

Existing beam type guiderail designated to be relocated shall be removed in its entirety by the Contractor. The Contractor shall clean the posts to the satisfaction of the Engineer, store, and reinstall the beam type

guide rail in the new sidewalk where shown on the Contract Drawings or as directed by the Engineers. Reinstallation of the guiderail shall comply with the methods specified herein for installing new guiderail.

6.30.7. MEASUREMENT.

(A) BEAM GUIDE RAILING AND MALL BARRIER

The quantity of guide railing or mall barrier measured for payment shall be the number of linear feet measured along the axis of the railing and between its extreme outer limits as shown on the Contract Drawings and/or the N.Y.S. -DOT's Standard Sheets or as directed by the Engineer. Where shop curved guide railing or mall barrier is required, the quantity of guide railing or mall barrier shall be the number of linear feet measured along the axis of the curved railing between the point of beginning of curvature and the point of ending of curvature as defined by the Engineer. If the railing is anchored to a structure instead of an anchorage unit, the railing will be measured up to the structure.

(B) ANCHORAGE UNITS FOR BEAM GUIDE RAILING AND MALL BARRIER

The quantity to be measured for payment shall be the number of each type anchorage unit actually incorporated into the work.

(C) RELOCATE BEAM TYPE GUIDE RAIL

The quantity of relocated beam type guide rail measured for payment shall be the number of linear feet of beam type guide rail actually reinstalled to the satisfaction of the Engineer, measured along the axis of the railing in its final position.

6.30.8. PRICES TO COVER.

(A) BEAM GUIDE RAILING AND MALL BARRIER

The contract prices bid for beam guide railing and for mall barrier shall be a unit price per linear foot and shall cover the cost of furnishing all labor, material, plant, equipment, insurance, and incidentals required and completing the work in accordance with the Contract Drawings, the specifications and the directions of the Engineer.

(B) ANCHORAGE UNITS FOR BEAM GUIDE RAILING AND MALL BARRIER

The contract prices bid for anchorage units shall be the unit price per each type and shall cover the cost of furnishing all labor, material, plant, equipment, insurance, and incidentals required and completing the work of constructing anchorage units, including necessary concrete, excavation and backfill within the anchorage unit pay limit shown on the N.Y.S.-DOT's Standard Sheets; all in accordance with the Contract Drawings, the specifications and the directions of the Engineer.

(C) RELOCATE BEAM TYPE GUIDE RAIL

The contract price for relocate beam type guide rail shall be a unit price per linear foot and shall cover the cost of furnishing all labor, materials, plant, equipment, insurance, and necessary incidentals required to remove the existing beam type guide rail in its entirety, clean the posts to the satisfaction of the Engineer, store, and reinstall the beam type guide rail in the new sidewalk where shown on the Contract Drawings or as directed by the Engineers.

Payment will be made under:

Item No.	Item	Pay Unit
6.30 AA	BEAM TYPE GUIDE RAIL	L.F.
6.30 UA	ANCHOR UNIT FOR BEAM TYPE GUIDE RAIL	EACH
6.30 AR	REMOVE EXISTING GUIDE RAIL	L.F.

6.30 AB	MALL BARRIER	L.F.
6.30 UB	ANCHOR UNIT FOR MALL BARRIER	EACH
6.30 RE	RELOCATE BEAM TYPE GUIDE RAIL	L.F.

SECTION 6.31 - Precast Concrete Wheel Stops

6.31.1. INTENT. This section describes the construction and installation of precast concrete wheel stops at locations indicated on the Contract Drawings or as designated by the Engineer.

6.31.2. DESCRIPTION. Precast concrete wheel stops shall be six (6') feet minimum in length and six (6") inches minimum in height.

Each wheel stops shall be fixed to the pavement surface with a minimum of two galvanized steel bolts.

6.31.3. MATERIALS.

(A) Concrete for precast concrete wheel stops shall comply with requirements of Section 3.05, Class A-40, Type IIA. An approved air entraining agent shall be added at the time concrete ingredients are mixed with water.

(B) Reinforcement shall comply with the requirements of A.S.T.M. Designation A 615, Grade 40.

Anchor bolts shall be one (1") inch in diameter by not less than twenty-four (24") inches long, unless otherwise shown on the Contract Drawings, and shall be galvanized in accordance with the requirements of ASTM A 123.

(C) Setting cement for bolts shall be a hydraulic type cement which, when mixed with water, will harden rapidly to produce a permanent anchoring bond. It shall contain neither Portland Cement, ferrous metals, nor rust promoting agents. Unit weight shall not exceed 125 pounds per cubic foot.

The material shall require no more than 48 fl. oz. of water to 10 lbs. of cement to achieve a pourable consistency and no more than 38 fl. oz. of water to produce a plastic consistency.

The compound when prepared in either of the consistencies above shall show no shrinkage on setting, but may exhibit a slight expansion of not more than 0.002 inches per linear inch.

Two (2") inch cubes cast from this material shall have the following minimum compression strengths:

At age 1 hour 4500 psi
At age 24 hours 5000 psi

6.31.4. METHODS. Precast concrete wheel stops shall be manufactured in accordance with the requirements of the approved shop drawings. The Contractor shall be required to furnish shop drawings of the proposed precast concrete wheel stops for approval prior to fabrication.

Precasting of wheel stops shall be done at a location selected by the Contractor, subject to the approval of the Engineer. Casting beds and longitudinal forms shall be made with metal forms. Longitudinal forms shall be adequately braced to prevent displacement during concreting operations. Wooden braces will not be permitted to remain in the concrete after pouring.

Concrete shall not be placed into the forms until the Engineer has inspected and approved the placing of reinforcement. The concrete shall be vibrated internally or externally, or both, as ordered by the Engineer. Vibrating shall be done with care and in such manner as to avoid both displacement of reinforcement and segregation of aggregate.

Steam curing will be permitted in lieu of water curing. If steam curing or other special method of curing is used, the method and its details shall meet with the approval of the Engineer.

Not less than two (2) test cylinders shall be taken from each batch or truck load of concrete used in the manufacture of precast concrete wheel stops. These cylinders will be used to determine the compressive strength of the concrete required and specified under **Subsection 6.31.3.**, above. Test cylinders shall be made and cured in accordance with the requirements of A.S.T.M. Designation C 31.

The Contractor shall use extreme care in handling and moving the precast concrete wheel stops. Wheel stops damaged in storage, handling, hauling, delivery or setting shall be replaced by the Contractor at his expense.

All surfaces of the wheel stops which will be exposed after installation shall be smooth and uniform in color with no coarse aggregate showing through. Mortar, used in filling holes, honeycombs or pock marks, shall be a 1:1 mix of cement and sand, colored to match the color of the wheel stop on which it is to be used. Mortar shall be applied to fill all depressions and shall be rubbed flush with adjacent surfaces.

Each precast concrete wheel stop to be installed shall be set in place where shown on the Contract Drawings or as directed by the Engineer.

After being set in place, each wheel stop shall be fixed to the pavement using two galvanized steel anchor bolts. The Contractor shall be required to drill two holes per wheel stop of sufficient depth into the pavement and install the anchor bolts and non-shrink hydraulic cement in each hole as shown on the Contract Drawings. The spacing of anchor bolts shall be as approved by the Engineer.

Equipment used for drilling shall be as approved by the Engineer, prior to use.

Drilling method shall not cause spalling or other damage to the concrete. Concrete spalled or otherwise damaged by the Contractor's operations shall be repaired in a manner approved by and to the satisfaction of the Engineer. Such repair shall be done at the expense of the Contractor. Holes shall have all foreign and loose material removed immediately prior to grout placement.

6.31.5. MEASUREMENT. Precast concrete wheel stops shall be measured for payment by each wheel stop installed to the satisfaction of the Engineer.

6.31.6. PRICES TO COVER. The unit price bid per each Precast Concrete Wheel Stop shall cover the cost of furnishing all labor, material, equipment, insurance, and incidentals required to furnish, deliver, and install precast concrete wheel stops, complete, and shall include, but not be limited to, the furnishing and incorporation of all concrete; reinforcement; curing; finishing; samples; testing equipment and facilities for testing; all, in accordance with the Contract Drawings, the specifications and the directions of the Engineer.

Payment will be made under:

Item No.	Item	Pay Unit
6.31 WS	PRECAST CONCRETE WHEEL STOPS	EACH

SECTION 6.32 (VACANT)

SECTION 6.33 - Steel Faced Mall Nosings

6.33.1. INTENT. This section describes steel faced concrete mall nosings.

6.33.2. DESCRIPTION. Nosings shall consist of solid concrete slabs, faced with steel, constructed to the radii and dimensions shown on the Contract Drawings.

6.33.3. MATERIALS. Concrete shall be Class B-32, Type IA; cement - Type I Portland; sand - Type 1A; and coarse aggregate - Type 1, Grade B, or Type 2, Size No. 57. An approved air-entraining agent shall be added at the time concrete ingredients are mixed with water.

Steel curb facing shall comply with the requirements of **Section 2.13** and shall be Type D, bent plate as per the New York City Department of Transportation's Standard Details of Construction Standard Drawing No. H-1010. All steel facing shall be given one (1) shop coat of Primer. All steel facing which will be exposed to view after installation shall be given one (1) shop coat of Intermediate paint and one (1) shop coat (rolled field coat permitted) of Finish topcoat. The color of the top coat shall be pigmented gray, as approved by the Engineer. All components of paint shall be compatible and supplied by a single manufacturer. Prior to field painting, the surfaces to be painted shall be clean, dry, and lightly sand papered. The list of acceptable manufacturers of the paint system shall be as specified under **Subsection 2.13.4**.

6.33.4. METHODS. Subsections 4.06.4. to **4.06.13.**, inclusive, shall apply to the work to be done hereunder.

Exposed concrete surfaces shall be given a wood float finish and shall be cured in accordance with **Section 2.14**, Type 1-D, Clear.

6.33.5. MEASUREMENT. The quantity to be measured for payment shall be the number of mall nosings of the several sizes shown on the Contract Drawings, actually incorporated into the work, complete.

6.33.6. PRICES TO COVER. The contract prices bid per each of the several sizes of mall nosings shall cover the cost of furnishing all labor, materials, plant, equipment, insurance, and necessary incidentals required and completing the work, including, but not limited to, painting steel facing, curing and all other necessary incidental work, in accordance with the Contract Drawings, the specifications and the directions of the Engineer.

Payment will be made under:

Item No.	Item	Pay Unit
6.33 A	STEEL FACED MALL NOSING, 1' TO UNDER 3' RADIUS	EACH
6.33 B	STEEL FACED MALL NOSING, 3' TO UNDER 6' RADIUS	EACH

SECTION 6.34 - Chain Link Fence

6.34.1. DESCRIPTION. Under this section, the Contractor shall furnish and erect new chain link fence, posts, gates, coil wire and all necessary incidentals in accordance with the Contract Drawings, the specifications and the directions of the Engineer.

Relocated chain link fence shall consist of removing existing fence in its entirety, cleaning posts to the satisfaction of the Engineer, storing fence, and reinstalling chain link fence in the new work where shown on the Contract Drawings or as directed by the Engineer.

Removed chain link fence shall consist of removing and disposing of existing chain link fence, including foundation, where shown on the Contract Drawings or as directed by the Engineer.

6.34.2. MATERIALS. All materials shall comply with the New York City Department of Transportation's Standard Details of Construction Standard Drawing Nos. H-1009 and H-1021, with the following exceptions:

(A) Fabric for fencing shall be aluminum-coated steel wire complying with the requirements of A.A.S.H.T.O. Designation M 181.

(B) Tie wire shall be aluminum alloy 1100-H14.

(C) Concrete for footings shall be Class B-32, Type IIA; cement - Type II Portland; sand - Type 1A; coarse aggregate Type 1, Grade B, or Type 2, Size No. 57; and an approved air-entraining agent shall be added at the time that concrete is mixed. Concrete, cement and aggregate shall comply with the requirements of Section 3.05.

6.34.3. METHODS. All methods shall comply with New York City Department of Transportation's Standard Details of Construction Standard Drawing Nos. H-1009 and H-1021. All debris shall be satisfactorily disposed of away from the site by the Contractor.

Relocating chain link fence shall consist of removing existing fence in its entirety, cleaning posts to the satisfaction of the Engineer, storing fence, and reinstalling chain link fence in the new work where shown on the Contract Drawings or as directed by the Engineer. All additional materials as may be required to re-erect the fence including the replacement of missing or damaged parts as a result of the Contractor's operations, shall comply with the requirements of **Subsection 6.34.2.**, above, and shall be deemed included in the price bid to Relocate Chain Link Fence.

Removing chain link fence shall consist of careful removal of the existing fence and demolish of its foundation to at least two (2') feet below existing grade or proposed grade, whichever is deeper, between the limits shown on the Contract Drawings or directed by the Engineer. The Contractor shall then fill the excavated areas with compacted clean sand to the subgrade of the new proposed pavement. Unless otherwise directed, all materials removed shall become the property of the Contractor and shall be removed and disposed of away from the site. In addition, care shall be exercised by the Contractor in the removal of the fence. Any damage to adjacent areas to remain caused by the Contractor's operations shall be repaired or replaced in kind, to the satisfaction of the Engineer, at the expense of the Contractor.

6.34.4. MEASUREMENT. The quantities of Chain Link Fence, Chain Link Fence Gate, and Relocate Chain Link Fence to be measured for payment shall be the number of linear feet of each type satisfactorily installed, complete, measured in place, from center to center of end posts.

The quantity of Remove and Dispose of Existing Chain Link Fence to be measured for payment shall be the actual number of linear feet of existing fence removed, complete with its foundation, measured in place along the top of fence from center to center of end posts.

6.34.5. PRICES TO COVER. The price bid for Chain Link Fence and for Chain Link Fence Gate shall be a unit price per linear foot of each size fence or gate, and shall cover the cost of all labor,

materials, plant, equipment, insurance, and necessary incidentals required to furnish and install new posts, chain link fabric, top and bottom coil wires, and all fittings and hardware necessary to erect the chain link fence and gate, complete in place, including excavation, backfilling and concrete footings where necessary; furnish samples for testing, as may be required; and completing the work; all in accordance with the Contract Drawings, the specifications and the directions of the Engineer.

The price bid for Relocate Chain Link Fence shall include the cost of furnishing all labor, materials, plant, equipment, insurance, and necessary incidentals required to remove the existing chain link fence in its entirety, clean the posts to the satisfaction of the Engineer, store, and reinstall the chain link fence in the new sidewalk where shown on the Contract Drawings or as directed by the Engineer. Reinstallation of the chain link fence shall comply with the methods specified under **Subsection 6.34.3.**, above.

The price bid for Remove and Dispose of Existing Chain Link Fence shall be a unit price per linear foot of existing fence removed and disposed, and shall cover the cost of all labor, materials, plant, equipment, insurance, and incidentals required to complete the work, including but not limited to the demolition of fence foundations and backfilling as required, all in accordance with the Contract Drawings, the specifications, and the directions of the Engineer.

Payment will be made under:

Item No.	Item	Pay Unit
6.34 AA	CHAIN LINK FENCE, 3’- 6” HIGH	L.F.
6.34 AB	CHAIN LINK FENCE, 4’- 0” HIGH	L.F.
6.34 AC	CHAIN LINK FENCE, 6’- 0” HIGH	L.F.
6.34 AD	CHAIN LINK FENCE, 8’- 0” HIGH	L.F.
6.34 AE	CHAIN LINK FENCE, 10’- 0” HIGH	L.F.
6.34 AF	CHAIN LINK FENCE, 12’- 0” HIGH	L.F.
6.34 AG	CHAIN LINK FENCE, 14’- 0” HIGH	L.F.
6.34 AH	CHAIN LINK FENCE, 16’- 0” HIGH	L.F.
6.34 AI	CHAIN LINK FENCE, 18’- 0” HIGH	L.F.
6.34 BA	CHAIN LINK FENCE GATE FOR 3’- 6” HIGH FENCE	L.F.
6.34 BB	CHAIN LINK FENCE GATE FOR 4’- 0” HIGH FENCE	L.F.
6.34 BC	CHAIN LINK FENCE GATE FOR 6’- 0” HIGH FENCE	L.F.
6.34 BD	CHAIN LINK FENCE GATE FOR 8’- 0” HIGH FENCE	L.F.
6.34 BE	CHAIN LINK FENCE GATE FOR 10’- 0” HIGH FENCE	L.F.
6.34 BF	CHAIN LINK FENCE GATE FOR 12’- 0” HIGH FENCE	L.F.
6.34 BG	CHAIN LINK FENCE GATE FOR 14’- 0” HIGH FENCE	L.F.
6.34 BH	CHAIN LINK FENCE GATE FOR 16’- 0” HIGH FENCE	L.F.
6.34 BI	CHAIN LINK FENCE GATE FOR 18’- 0” HIGH FENCE	L.F.
6.34 CC	CHAIN LINK FENCE WITH TENSION WIRES, 6’- 0” HIGH	L.F.
6.34 E	RELOCATE CHAIN LINK FENCE	L.F.
6.34 X	REMOVE AND DISPOSE OF EXISTING CHAIN LINK FENCE	L.F.

SECTION 6.35 (VACANT)

SECTION 6.36 - Structural Repair and Adjustment of (City Owned) Utility Structures

6.36.1. INTENT. This section describes the work of performing the necessary structural repairs to damaged City-owned utility structures by rebuilding the existing installation and resetting the castings, or by any other method if approved by the Engineer and the Department having jurisdiction over the structure, and for the adjustment of manholes, including vaults, etc., and valve boxes, by building up installations. In addition, in pavement areas to be resurfaced, where milling alone does not provide the necessary hardware elevation for resurfacing, the Contractor shall build-up installations as necessary to adjust hardware with respect to the proposed adjacent elevation.

6.36.2. DESCRIPTION. Structural repair and adjustment of City-owned utility structures, which include manholes, valve boxes, catch basins and other City-owned utility structures, shall consist of removing the existing frame and cover, and rebuilding, adjusting or modifying the existing damaged or not at proper elevation installation and/or roof slab, as directed by the Engineer.

In roadway pavement areas designated to be reconstructed, the cost of raising or lowering City-owned manhole, basin, and inlet heads to proposed grades will be deemed included in the prices bid for all the scheduled items when the vertical upward movement of all heads is twenty-four (24") inches or less, when the vertical downward movement of manhole heads is six (6") inches or less, and when the vertical downward movement of basin heads is three (3") inches or less, unless otherwise provided or directed, and where the adjustment is within the limit of brick. When the existing structure consists of a brick chimney on a concrete roof slab or brick on concrete walls, the maximum allowable height of brick, after adjustment, shall be twenty-four (24") inches. All other structural repair and adjustments will be paid for under this item, unless otherwise directed or provided for in other contract items.

In roadway pavement areas designated to be resurfaced, the cost of structural repair and adjustment of City-owned utility structures shall be paid for under this item, unless otherwise directed or provided for in other contract items.

6.36.3. MATERIALS. All materials used shall comply with the standards of the Department having jurisdiction over the installation, except that concrete shall be a high-early strength concrete complying with the requirements as specified under Section 3.05 and the requirements for mortar shall be quick setting, capable of obtaining a minimum compressive strength of 1,500 psi in two (2) hours.

6.36.4. METHODS. All work shall comply with the standards of the Department having jurisdiction over the installation, unless otherwise directed by the Engineer.

The Contractor shall perform the necessary structural repair and adjustment, where directed by the Engineer, to rebuild or modify existing damaged utility structure walls, including roof slabs, where applicable, which shall be removable, cast on the job site, with high-early strength concrete.

Resetting existing or new castings (new castings to be paid for under Item 6.22 F), as determined by the Engineer, shall be done with brick and mortar according to the standards of the appropriate Department having jurisdiction over the installations.

All work shall be done in a workmanlike manner and any damage resulting from the Contractor's operations, to the existing installation which is to remain, shall be satisfactorily corrected, as directed by the Engineer, at the Contractor's expense and at no additional cost to the City.

Removed and damaged pavement shall be replaced with high-early strength concrete to grade of the adjacent existing pavement as directed by the Engineer.

6.36.5. MEASUREMENT. The quantity to be measured for payment shall be the number of cubic yards of concrete, brick and mortar actually placed in the structure to the grade of the existing frame, to the satisfaction of the Engineer. In determining the volume of concrete, brick and mortar to be

paid for, no deductions will be made for the spaces occupied by steel reinforcement and measurement for payment shall be made to the nearest hundredth of a cubic yard.

Use of this item shall be limited to locations specifically directed in writing by the Engineer and shall not be used in conjunction with other hardware adjustment items.

6.36.6. PRICE TO COVER. The contract price bid under this item shall be a unit price per cubic yard of concrete, brick and mortar placed in the utility structure and shall cover the cost of all labor, materials, plant, equipment, insurance, and incidentals required to structurally repair and adjust City-owned utility structures, including all excavation, backfill, sheeting, bracing, steel bar reinforcement, pavement restoration to the existing grade with high-early Strength concrete, and the furnishing of samples, as required; all in accordance with the specifications and the directions of the Engineer.

No separate payment will be made for adjustment of hardware in sidewalk area the cost of which shall be deemed included in the prices bid for all scheduled items. The cost of adjustment in the roadway area shall be per cubic yards of installed (or removed where adjusted lower) of the utility structure. The cost of restoration of the roadway adjacent to the structure is included in the price bid for this item.

New frames and/or covers, where required, will be paid for under Item 6.22 F, “Additional Hardware,” or furnished by others.

Payment will be made under:

Item No.	Item	Pay Unit
6.36 DR	STRUCTURAL REPAIR & ADJUSTMENT OF UTILITY STRUCTURES	C.Y.

SECTIONS 6.37 THRU 6.38 (VACANT)

SECTION 6.39 - Mobilization

6.39.1. DESCRIPTION. Under this section, the Contractor shall set up his necessary general plant, including shops, storage areas, office and such sanitary and other facilities as are required by City, State or Federal law or regulation. Unless otherwise provided, the cost of required bonds and/or any other similar significant initial expense required for the initiation of the contract work shall also be included in this section. The determination of the adequacy of Contractor’s facilities, except as noted above, shall be made by the Contractor.

6.39.2. MATERIALS. Unless otherwise specified, such materials as are required that are not to be a part of the completed contract shall be as determined by the Contractor, except that they shall conform to any pertinent City, State or Federal law, regulation or code.

6.39.3. CONSTRUCTION METHODS. Such work as is done in providing the facilities and services under this section shall be done in a safe and workmanlike manner and shall conform with any pertinent City, State or Federal law, regulation or code. Good housekeeping consistent with safety shall be maintained.

6.39.4. PRICE TO COVER. Payment will be made by lump sum. The amount bid shall include the furnishing and maintaining of any plant, services or other facilities noted under "Description" to the extent and at the time the Contractor deems them necessary for his operations, consistent with the requirements of this section and this contract. The amount bid for this lump sum item shall be payable to the Contractor whenever he shall have completed 10% of the work, provided the final contract price, which includes this item, is at least 50% of the original price bid for this contract. For the purposes of this item, 10% percentage of the work shall be considered completed when the total of payments earned, not including the amount bid for this item, shall exceed 10% of the total amount of the Contractor's bid for this contract.

However, should the contract be terminated prior to completion of at least 50% percent of the original price bid for this contract or should the final contract price be less than 50% of the original contract price bid for this contract, then the Contractor will be paid a portion of this item based on actual costs submitted to, verified and approved by the Engineer. Where the Contractor has already received the original total payment for this item after completion of 10% of the work, then any monies owed the City due to the above specified reduction in payment will be withheld from monies owed the Contractor.

The amount bid for Mobilization shall not exceed four percent (4%) of the total contract price, excluding the price bid for Mobilization, and in no case will payment under this item exceed the original price bid for this item

Payment will be made under:

Item No.	Item	Pay Unit
6.39 A	MOBILIZATION	L.S.

SECTION 6.40 - Engineer's Field Office

6.40.1. DESCRIPTION. The Contractor shall provide, furnish and maintain a fully equipped field office (Type A, B, C, CU, D or DU, as specified) for the exclusive use of and occupancy by the Department's engineering personnel and/or Supervising Consultant (herein after called "City personnel"), and by the engineering personnel of private utilities when specified. The field office shall be at a location approved by the Engineer and shall be a commercial building, store front, or with the approval of both Office of Construction Mitigation and Coordination (OCMC) and the Community Board it may be a mobile trailer(s). If a trailer is used it shall be subject to approval by the Engineer, and all necessary permits shall be obtained by the Contractor. The Contractor may have facilities in an adjoining area separated by a lockable door, provided such facilities are in a location approved by the Engineer.

The field office structure and occupancy thereof shall conform to the requirements of all laws, rules, regulations and orders applicable to it.

The field office and all equipment, except as otherwise specified, may be new materials or may be used materials in good condition and satisfactory to the Engineer.

6.40.2. MATERIALS.

(A) GENERAL CONSTRUCTION. The Engineer's Field Office shall be in an approved and weatherproof building. It shall have a minimum ceiling height of seven (7') feet and be partitioned to provide the number of rooms required for the type of office specified. Floor space for Field Office Types

C, CU, D, and DU shall be subdivided into work areas based on a floor plan provided by the City to the Contractor upon notification of space availability.

(B) GENERAL FACILITIES. The field office shall contain or have the following facilities incorporated:

(a) Lighting - Electric light, non-glare type luminaries to provide a minimum illumination level of 100 ft.- candles at desk height level.

(b) Heating and Cooling - Adequate equipment to maintain an ambient air temperature of 70° F. $\pm 5^{o}$.

(c) Electrical Energy Outlets

(d) Toilet - A separate enclosed room, properly ventilated per code and complying with applicable sanitary codes shall contain a lavatory with running hot and cold water, flush-type toilet, mirror, electric hand dryer, and paper towel dispenser.

(e) Potable Water - Potable water supplied from an existing system or five (5) gallon capacity water cooler of a type to be approved by the Engineer shall be provided for use by City personnel. Replacement bottles of water shall be provided by the Contractor, when required.

(f) Signs - Store front locations shall have a window graphic sign in black and white lettering with the following inscription. Other locations shall have a wood or metal sign affixed on the outside wall of the building with the following inscription painted in black block lettering on a white background. Paints shall be approved exterior enamels.

CITY OF NEW YORK	2-1/2”
DEPARTMENT OF DESIGN AND CONSTRUCTION	3-1/2”
INFRASTRUCTURE	2-1/2”
RESIDENT ENGINEER’S FIELD OFFICE	2-1/2”

(g) Electric Refrigerator - five (5) cubic feet minimum capacity for use by City personnel.

(h) Stove Top - Two-burner electric hot plate or approved coffee maker for use by City personnel.

(i) Windows and Doors - All windows and doors shall be weatherproof and each equipped with adequate locking devices. Each window shall be equipped with vertical blinds. Exterior doors shall be provided with two (2) separate “high security” dead bolt type cylinder locks, keyed alike, and three (3) keys shall be furnished for each lock.

(j) Partitions - Partitions for work space enclosures shall be either permanent walls or of the modular type similar to Herman Miller’s standard fabric covered line.

(C) OFFICE EQUIPMENT.

(a) Pencil Sharpener - One standard pencil sharpener for use by City personnel.

(b) Telephone Answering Machine - The telephone answering machine to be provided shall be an electronic digital voice machine with emergency call forwarding capability. It shall be operable twenty four (24) hours per day and, when unattended, shall transmit to the caller the following message:

"You have reached the Field Office of the New York City Dept. of Design and Construction. No one is here now. We check our incoming messages frequently. We will get back to you as soon as possible. Please leave your name, message and phone number where you may be reached. In case of emergency, call the New York City Hotline at 311. Again, the emergency number is 311."

(c) Computer Equipment - Computers shall be provided for all contracts regardless of construction duration.

Computers furnished by the Contractor for use by City Personnel, for the duration of the contract, shall be in accordance with Table I - ADDITIONAL SPECIFIC REQUIREMENTS, contained herein, and shall meet the following minimum requirements:

(1) Personal Computer(s) - Workstation Configuration.

(a)	Make and Model:	Dell; Gateway; HP; Toshiba; or, an approved equivalent. (Note: an approved equivalent requires written approval of the Assistant Commissioner of ITS.)
(b)	Processor:	Intel Pentium Dual Core Processor (2.0GHz, 512K, 800, MHz) or faster CPU.
(c)	System Ram:	Minimum of 2 GB (Gigabytes) of DDR2 Non-ECC SDRAM, 800 MHz.
(d)	Hard Disk Drive(s):	80 GB (Gigabytes) or larger 7200 RPM SATA 3.0 Gb/s.
(f)	Optical Drive	Internal 16X DVD+/-RW and 16X or faster.
(h)	I/O Ports:	Must have at least one (1) Serial Port, one (1) Parallel Port, four (4) USB Ports (2 front, 2 rear), one (1) VCA port.
(i)	Video Display Card:	PCI or AGP Interface with a minimum of 256 MB of RAM.
(j)	Monitor:	17" TFT LCD Monitor.
(k)	Available Slots:	System as configured above shall have at least two (2) full size PCI Slots available.
(l)	Networking:	Integrated or PCI 10/100/1000 Gigabit Ethernet; Internal V92 V44 PCI Fax/Modem 56 Kbps or faster.
(m)	Other Peripherals:	Optical scroll Mouse, 101 Key Keyboard, Mouse Pad and all necessary cables; internal media card reader.

(n) Software Requirements: Microsoft Windows XP Professional; Microsoft Office 2007 Professional; Microsoft Project 2007; Adobe Acrobat reader; Anti-Virus software package with 1 year updates subscription; Win Zip; Auto Cad 2008 LT; and, Microsoft Visio 2007 Standard Edition or an approved equivalent.

(2) All field offices requiring computers shall be provided with the following:

(a) One (1) broad-band internet service account. This account will be active for the life of the project. The e-mail name for the account shall be the DDC Field Office/project Id (e.g. FLD K HWK666 McGuinness@earthlink.com).

(b) One (1) 600 DPI HP Laser Jet Printer (twelve (12) pages per minute or faster) with one (1) Extra Paper Tray (Legal Size).

(c) All necessary Cabling.

(d) Storage Boxes for and Blank CDs/DVDs.

(e) Printer Table.

(f) UPS/Surge Suppressor combo.

(3) All computers required for use in the Engineer's Field Office shall be delivered, installed, and setup in the Field Office by the Contractor.

(4) All Computer Hardware shall come with a three (3) year warranty for on-site repair or replacement. Additionally, and notwithstanding any terms of the warranty to the contrary, the Contractor is responsible for rectifying all computer problems or equipment failures within one (1) business day.

(5) An adequate supply of blank CDs/DVDs, and paper and toner cartridges for the printer shall be provided by the Contractor, and shall be replenished by the Contractor as required by the Engineer.

(6) It is the Contractor's responsibility to ensure that electrical service and phone connections are also available at all times; that is, the Field Office Computer(s) is to be powered and turned on twenty-four (24) hours each day.

Broadband connectivity is preferred at each field office location. Please take into consideration that an extra phone line dedicated to the modem must be ordered as part of the contract unless Internet broadband connectivity, via Cable or DSL, is available at the planned field office location. Any questions regarding this policy should be directed to the Assistant Commissioner of Information Technology Services at 718-391-1668.

(d) Data Books - A copy of The AED Green Book, latest edition, published by Machinery Information Division of K-III Directory Corporation, 1735 Technology Drive, Suite 410, San Jose, California 95110-1313, shall be provided for all contracts that have a total Consecutive Calendar Days for General Construction duration as set forth in Schedule "A" of greater than 365 CCD's. Contracts of lesser duration shall not require any data books.

(D) Field Testing Equipment.

(a) 2 - Air Entrainment Meters - Pressure Type, with carrying case for use by City personnel. Each meter shall be capable of producing an accurate test result in approximately five (5) minutes and shall comply with ASTM Designation C 231.

(b) 2 - Slump Test Sets - Slump cone and test sets conforming to the requirements of ASTM Designation C 143, complete with rod and scoop for use by City personnel.

(c) Thermometers: For use by City personnel.

(1) 1 - Minimum-maximum thermometer.

(2) 3 - Asphalt thermometers of stainless steel construction with an accuracy of 0.5% of the full scale, able to measure temperatures from 50 to 500 degrees F. in 5 degree increments.

(3) 3 - Surface Thermometers able to measure temperatures of flat surfaces similar to Sargent-Welsh Model S81441-D, or an approved equivalent.

(d) Nonsparking Pinch Bar - For use in opening manholes.

(e) Gas Meters - For use in detecting the presence of explosive gases and vapors for use by City personnel.

(f) Straight Edge - One 10 foot long straight edge for use by City personnel in detecting pavement surface tolerance.

(g) 48" Smart Level - For use in determining pedestrian ramp and sidewalk slopes.

(h) Chlorine Test Kits – For testing residual chlorine levels following water main flushing.

(i) Green Florescent Power Trace-Dye – For testing sewer connections.

(j) One Million Candlepower Rechargable Flashlight.

(k) Distance Measuring Wheel – For measuring long distances.

6.40.3. SPECIFIC REQUIREMENTS FOR ENGINEERS FIELD OFFICE (TYPE A, B, C, CU, D OR DU). In addition to the general requirements, each type of Field Office shall have the minimum floor area indicated in Table 6.40-I. The Contractor shall provide and maintain furnishings for each type of Field Office in the quantity specified in Table 6.40-I. The furnishings shall be new or used equipment satisfactory to the Engineer:

(a) Each Type shall have a minimum of one outside door and four windows.
(b) Type C shall be partitioned to provide three (3) rooms.
(c) Type CU shall be partitioned to provide four (4) rooms, one of which shall be at least 150 s.f. in area (for use by private utilities).
(d) Type D shall be partitioned to provide four (4) rooms.
(e) Type DU shall be partitioned to provide five (5) rooms, one of which shall be at least 150 s.f. in area (for use by private utilities).

TABLE I
ADDITIONAL SPECIFIC REQUIREMENTS

SPECIFIC REQUIREMENTS	FIELD OFFICE TYPE					
	A	B	C	CU	D	DU
Minimum Floor space (Square Feet)	300	400	800	800	1,500	1,500
Office desks, at least 4'-8" x 2'-8", with drawers, locks, and keys.	2	2	4	8*	8	12*
Swivel chairs, with arms, for the above.	2	2	4	8*	8	12*
Office folding chairs, metal, with padded seats and backs.	2	3	6	14**	8	16**
Steel supply cabinets (approximate size 72" high by 36" wide by 18" deep), with four adjustable shelves, tumbler lock and 3 keys.	1	1	1	1	1	1
Fire resistant cabinet, 4-drawer, legal size with lock and three (3) keys, meeting the requirements for "Filing devices, Insulated (36 E 9)" Class D Label, of the Underwriters' Laboratories, Inc. Specifications.	1	1	1	3***	4	6***
Individual lockers (17" wide x 18" deep x 72" high) with flat key locks and two (2) keys each.	1	1	4	4	4	4
Calculating machines, tape type with digital display registering at least ten (10) digits.	1	1	2	2	3	3
Typewriter, long carriage, standard 16-inch size with pica type.	1	1	1	1	2	2
Waste paper baskets (metal, approximately 12" square by 16" high).	1	2	2	6*	4	8*
Fire extinguishers, non-toxic, dry chemical type meeting Underwriters Laboratories, Inc., approval for Class A, Class B and Class C fires with a minimum rating of 2A:lOB:10C.	1	1	2	3****	4	5****
First Aid Kit kept properly stocked with appropriate first aid supplies at all times.	1	1	1	1	2	2
Drafting tables (3'-0" x 5'-0") with storage drawers and stool.	1	2	2	3****	4	5****
Photocopying Machine. - Desk top, heavy duty, electric, dry process photocopying type and an adequate supply of copy paper, toner, etc. The supply of copy paper, toner, etc. shall be replenished and the machines shall be maintained for the duration of the contract by the Contractor as required by the Engineer.	1	1	1	1	2	2
Vertical filing plan racks for six sets of 22"x36" plans each rack.	1	1	2	3****	4	5****
Telephone lines for calls within New York City limits, where one shall be dedicated for the Fax Machine, one for each computer fax/modem and the others for telephone instruments.	4	6	6	7‡	8	9‡
Telephone instruments.	2	2	3	5‡	4	6‡
Telephone answering machine.	1	1	1	1	1	1
Fax Machine - With an adequate supply of copy paper, toner, etc. The supply of copy paper, toner, etc. shall be replenished and the machines shall be maintained for the duration of the contract by the Contractor as required by the Engineer.	1	1	1	1	1	1
Personal Computer - Workstation Configuration	1	3	3	3	4	4
Bottled water with refrigerator unit-hot/cold water. (For private utilities room.)				1		1

‡ *Provide one (1) telephone line and two (2) telephone instruments for the exclusive use by private utilities personnel. The line shall interconnect the two telephone instruments by push button control.*

* *Provide four (4) each of Office Desks, Swivel Chairs and Waste Paper Baskets in private utilities room.*

** *Provide eight (8) Folding Chairs in private utilities room.*

*** *Provide two (2) Fire Resistant 4- Drawer Legal Size Cabinets in private utilities room.*

**** *Provide one (1) each of Fire Extinguisher, Drafting Table and Vertical File Rack in private utilities room.*

6.40.4. CONSTRUCTION METHODS. The building shall be fully equipped and made available for use and occupancy by the Department's personnel and/or Supervision Consultant not less than thirty (30) days prior to the start of any contract work.

The building interior (including access foyers, stairwells, etc.) shall be maintained in good, clean, and sanitary working condition by the Contractor for the duration of the contract. The Contractor shall provide and pay all costs for electrical service, telephone service for calls within New York City limits, hot and cold water, heat and fuel, and daily janitor service. Staples, such as paper towels, hand soap, toilet paper, and similar supplies, shall always be available.

Where necessary, the site for a mobile trailer(s) shall be graded and shoulder stone placed and maintained as directed by the Engineer to provide a parking area for City personnel and, if necessary, an approach road shall be provided. Plumbing work shall include all water supply, drainage and piping required for the operation of a complete installation. Temporary water service shall be provided from an existing main and extended into the trailer and all fixtures requiring water supply shall be properly connected up. All necessary soil, waste, vent and drainage piping shall be provided and connected to the existing sewer or as otherwise directed.

The office, incorporated facilities, equipment, and personal property of the Department's employees shall be protected by the Contractor against loss or damage from fire, theft, or other causes, at all hours of the day and night. The Contractor shall provide fire insurance, extended coverage and vandalism, malicious mischief and burglary, and theft insurance coverage in the amount of forty thousand dollars ($40,000.00) for office equipment of the City of New York in the Engineer's field office and for property of City personnel that is used in the contract work and stored in the office. All insurance coverage shall be written by a company approved by the Commissioner and payable in case of loss to the City of New York. The office shall be maintained by the Contractor in first class condition until final acceptance of the work.

At the direction of the Engineer, any equipment on the above lists may be deleted. He may direct that other equipment of equivalent value be supplied by the Contractor or an appropriate credit be taken for the value of equipment not provided.

When directed by the Engineer, the Contractor shall disconnect all services and remove and dispose of all temporary installations from the site, including fencing, surfacing and utilities, the area shall then be cleaned, loamed and seeded if required and left in a neat and acceptable condition. On and after the date of the Engineer's Final Acceptance, the temporary structure and all installed equipment shall become the property of the Contractor, and shall be disposed of, by him, away from the site of the work. Engineer's Final Acceptance shall be when the Contractor has completed all punch list work and Official Completion Date has been set.

6.40.5. NONCONFORMANCE. No payment will be made under Engineer's Field Office for each calendar day during which there are deficiencies in compliance with the requirements of any subsection of this specification. The first calendar day shall commence twenty-four (24) hours after notice to the Contractor of such a deficiency. This non-payment shall be deducted from the Contractor's next estimate as a charge to the Contractor on the item. The amount of such calendar day non-payment will be determined by dividing the unit price bid per month by 30.

In addition, the Contractor may be subject to liquidated damages in accordance with Schedule "A".

6.40.6. MEASUREMENT. The quantity to be measured for payment under this item shall be the number of months that the Field Office is available for occupancy by the Field Engineers during the period of the contract. Payment will begin the first month that the office is fully equipped, serviced as specified, and made available for occupancy. Monthly payments will continue for the duration of the contract with the approval of the Assistant Commissioner of Construction. When directed in writing by the Assistant Commissioner of Construction, payment for each month's occupancy after the date of acceptance will be made as part of the final estimate. Monthly payments may be terminated on a specified date prior to acceptance of the contract by written notification by the Engineer that such office will no longer be required on the contract.

6.40.6. PRICE TO COVER. The unit price bid per month for the item Engineer's Field Office shall include the cost of furnishing all labor, materials, equipment, ground rental, fire and theft insurance, and utility charges necessary to complete the work of providing or constructing the field office; making all necessary electrical, water, sewer, and other connections required to make the above facilities operative; payment of all rental costs; furnishing and paying for heating fuel, as required; all electrical energy; private telephone services; staples, as specified; and all necessary incidentals to complete the work - all in accordance with the specifications and the directions of the Engineer.

Payment will be made under:

Item No.	Item	Pay Unit
6.40 A	ENGINEER'S FIELD OFFICE (Type A)	MONTH
6.40 B	ENGINEER'S FIELD OFFICE (Type B)	MONTH
6.40 C	ENGINEER'S FIELD OFFICE (Type C)	MONTH
6.40 CU	ENGINEER'S FIELD OFFICE (Joint Use) (Type CU)	MONTH
6.40 D	ENGINEER'S FIELD OFFICE (Type D)	MONTH
6.40 DU	ENGINEER'S FIELD OFFICE (Joint Use) (Type DU)	MONTH

SECTION 6.40 TFS - Transportation for the Engineer

6.40TFS.1. DESCRIPTION. The Contractor shall provide at the start of work Contractor owned vehicle(s) for use by DDC Engineers responsible for the oversight of this Contract as designated by the Commissioner. The number of vehicles to be furnished shall be equal to the nearest whole number obtained by dividing the number of months specified for this item in the Bid Schedule by the duration in months for each vehicle. The duration in months for each vehicle shall be determined by dividing the sum total of one hundred and eighty (180) days plus the number of consecutive calendar days specified for the base contract duration (see Schedule "A") by thirty (30) days.

6.40TFS.2. MATERIAL. The vehicle(s) shall be a "Hybrid Compact Sedan" or "Flex-Fuel" vehicle(s) as approved by the Commissioner. They shall not be over two (2) years in age unless they have fewer than thirty thousand (30,000) miles or is otherwise approved, and shall be equipped with or meet the following minimum specification:

(1) Engine: Manufacturer's Electric Hybrid or Flex-Fuel.
(2) Transmission: Automatic.
(3) Drive: Manufacturer's Standard Front Wheel.
(4) Steering: Power.
(5) Air Conditioning: Factory Installed.
(6) Body: 4-Door.
(7) Color: Manufacturer's Standard White, Black or Gray.
(8) Mirror: Left and Right.
(9) Radio: AM/FM.
(10) Electric Rear Window Defogger.
(11) Brakes: Anti-Lock
(12) Air Bag:Both Driver and Passenger Side if available
(13) Fire Extinguisher.
(14) First Aid Kit.

Substitution of vehicle brands, types, and specified equipment may be permitted only if approved by the Commissioner.

6.40TFS.3. METHODS. The Contractor shall provide oil, proper maintenance, tires and replacement parts to keep each vehicle in safe operating condition, and shall undertake all repairs, including repairs arising from vandalism, accidents or other damages. In the event that any vehicle requires maintenance or repairs which cannot be completed within five (5) business days, a comparable vehicle shall be provided while the vehicle is out of service. If any vehicle is lost or stolen, the Contractor shall replace the vehicle within five (5) business days with a comparable vehicle.

For the purpose of this item, substantial completion shall be when all contract work, with the exception of Punch List Work, is completed. Contractor owned vehicles, provided under this Contract, shall remain the property of the Contractor and shall be registered in the City's name. The Contractor shall provide insurance for vehicle(s) as set forth in Schedule "A".

Within five (5) business days of receipt of notice to commence work, the Contractor shall make the vehicles available for inspection by DDC. Upon inspection and determination by DDC's Construction Borough Director that the vehicles satisfy the requirements, the Contractor shall make arrangements through the DDC Infrastructure Division Chief Administrative Officer for delivery to DDC. The Contractor shall submit original documents, unless otherwise permitted, to the Chief Administrative Officer who will then transmit those documents to the Agency Fleet Administrator for review and processing. These documents shall consist of a signed MV-82 (4/90) "Vehicle Registered/Title Application", authorizing registration in the City's name, together with, in the case of a previously unregistered vehicle, the Manufacturer's Certificate of Origin, Odometer Verification, New York State Sales Tax clearance or, in the case of a currently registered vehicle, the Title, along with all other documents and out of State sales tax, when applicable, to permit the vehicle to be registered in the City's name.

All required transmittals to the DDC Infrastructure Division Chief Administrative Officer shall be made as follows:

Infrastructure Division Chief Administrative Officer
NYC Department of Design and Construction
30 - 30 Thomson Avenue, 3rd Floor
Long Island City, NY 11101
Telephone No.: (718) 391-1910

When vehicles are no longer required under this Contract, they shall be de-registered by the City and immediately returned to the Contractor.

6.40TFS.4. MEASUREMENT. The quantity to be measured for payment shall be the number of months (or parts thereof) that the vehicle(s) is available for use by approved engineering personnel during the period from delivery until the earliest of 6 months past substantial completion date or final acceptance date, as determined by the Engineer. Payment will begin the first month that the vehicle(s) is furnished and delivered as specified and shall continue for the duration of the payment period. Monthly payments may be terminated at any time by written notification by the Commissioner that such vehicles will no longer be required on the Contract.

The Contractor is advised that under no circumstance shall any additional vehicles be added to the project during the course of construction beyond that prescribed in the contract at the time of the Bid Opening, without written approval of the Commissioner.

6.40TFS.5. PRICE TO COVER. The contract price bid for Transportation for the Engineer shall be the Fixed Sum per month for each vehicle as shown in the Bid Schedule and shall cover the cost of all labor, materials, and insurance required and necessary to provide each vehicle, including fuel, oil, maintenance, tires, replacement parts, repairs, equipment, and do all work incidental thereto, all in accordance with specifications and as directed by the Engineer. A Gas Company Card shall be furnished with each vehicle for fueling purposes. Any costs associated with this item over and above the fixed sum per month shall be deemed included in the prices bid for all scheduled Contract items.

No payment will be made under this item for each calendar day during which there are any deficiencies in a vehicle. The first calendar day shall commence twenty-four (24) hours after notice to the Contractor of such deficiency. This non-payment shall be deducted from the Contractor's next estimate as a charge to the Contractor on the item. The amount of such non-payment for each deficient day will be one hundred and forty ($140.00) dollars.

The "Fixed Sum/Month" is for bidding purposes only and shall not be varied in the Bid Schedule. The Contractor will be paid for the actual number of months that the vehicle is available for use by the Engineer in accordance with **Subsection 6.40TFS.4.**, above, regardless of the total fixed sum amount shown in the Bid Schedule.

Payment will be made under:

Item No.	Item	Pay Unit
6.40 TFS	TRANSPORTATION FOR THE ENGINEER	F.S./MONTH

SECTION 6.41 - Line-and-Grade Surveys

6.41.1. INTENT. This section describes the survey work required for the establishment of lines and grades and for the staking out and layout of the work.

6.41.2. DESCRIPTION. The work under this section shall consist of the following:

(A) Obtaining necessary information, such as bench marks, location of monuments, monument coordinates, bearings of monument lines, angular and linear measurements, and other required data, from the Topographical Bureau in the Office of the President of the Borough in which the work is to be done.

(B) Based upon the information obtained in (A) above, make all necessary computations required and run a survey to tie the points of intersection of the building line of the street which is to be improved and the building lines of intersecting streets to the monument system. Intermediate points shall be provided when the building line of the street under improvement changes direction or is curved.

(C) Establish the control points on each side of the street to be improved for the offset base line which will be used for the curb construction line. The control points shall be fixed at some convenient offset, measured from corner building line intersection points along a line extending toward the curb at right angles to the building line of the street under improvement. Control points at changes in direction and on curves shall be established where directed by the Engineer.

All control points shall be properly referenced to permit re-establishment in the event such points are disturbed or lost. The Contractor shall re-establish such lost or disturbed points at such time as the Engineer shall direct.

(D) Using the established control points, the Contractor shall lay out corner grade stakes or marks and also, at intervals not exceeding fifty (50') feet, all intermediate grade stakes or marks which may be required for curb construction and establishment of gutter grades. Grade stakes or marks shall be placed at all breaks in grade.

(E) The extension of the line used for the establishment of a control point, as described in (C) above, shall be continued to the proposed curb line. The extended line shall be given an arbitrary station and all stationing along the work shall be based upon such arbitrary station. Where street improvements

extend over consecutive blocks, the stationing in subsequent blocks shall be referenced to that in the initial block.

(F) Preliminary transverse cross-sections, from building line to building line, shall be taken by the Contractor along the street which is to be improved at longitudinal intervals not exceeding fifty (50') feet, at all grade breaks, and at the ends of streets midway into intersecting streets. The transverse cross-sections shall be plotted on approved cross-section paper, or by computer plot to a scale of 1" = 1' - 0", vertical, and 1" = 10' - 0", horizontal, and in a format that shall be subject to prior approval by the Engineer. The Contractor shall plot to the same scale a longitudinal profile for each curb line, showing the proposed and existing curb line elevations at not more than twenty-five (25') feet intervals and at intermediate points where unusual sidewalk conditions occur and where trees may be affected. He shall also prepare two (2) copies of curb and gutter grade sheets: one (1) for his own use and one (1) for the Engineer's use. All plotting shall be done in 25" x 36" size sheets unless otherwise approved by the Engineer. All plotted material, curb and gutter grade sheets and supporting data shall be submitted to the Engineer, for approval, at least one (1) week before any work is started. Where the Contractor fails to comply with this requirement the Contractor will be held responsible for and shall bear all costs resulting from any changes in grade.

(G) Copies of all survey notes and sketches, together with a certification that lines and grades used in the completed work comply with contract requirements, shall be delivered to the Engineer. All such copies shall be signed by and bear the seal of a Professional Engineer or Professional Land Surveyor who is licensed to practice in the State of New York.

(H) The Contractor shall provide the required survey party or parties and all necessary surveying equipment. He shall make all necessary computations and determine the alignment, elevation and position for all construction work and he shall be responsible for the accuracy of all lines and grades which he establishes for himself. Any check made by the Engineer of the work done by the Contractor shall not relieve the Contractor of such responsibility.

(I) The Contractor shall safeguard all points, stakes, grade marks, monuments and bench marks, made or established on or near the line of the work and he agrees to accept responsibility for and to remedy at his cost and expense any mistakes that may be caused by the unauthorized disturbance or removal of such points, stakes, grade marks, monuments and bench marks.

The Contractor shall not disturb or excavate within five (5') feet of any City monument which may be within the limits of the work but shall cease operations at such places until he has referenced the said monument to enable him to reset it. No monument shall be disposed of unless, in accordance with the City ordinances therefor, the Contractor obtains special permission from the Commissioner for such disposal.

In the event the Contractor fails to reference a monument, as required, or the Contractor fails to reset a monument when special permission for its disposal is not or cannot be obtained from the Commissioner and such resetting is ordered by the Engineer, the City may use its own forces or obtain the services of a Professional Land Surveyor, licensed to practice in the State of New York, to perform such referencing or resetting work, or both.

(J) The Contractor shall furnish the necessary forms, templates, lines, spirit levels, stakes and other tools, implements and material and employ competent and skillful men to correctly set out from the grade marks or stakes all details of the work, in full accord with the Contract Drawings, the specifications and the directions of the Engineer.

6.41.3. ACCURACY OF SURVEYS. In general, angular measurements shall be at least equal in precision to that given for the horizontal controls.

The precision of horizontal control for the establishment, referencing and re-establishment of building line intersection points and for the referencing and resetting of existing monuments, if required, shall be

1/50,000. For the establishment and re-establishment of base line control points the control traverse shall have an error of closure no greater than 1/20,000 after initial angular adjustment.

Precision for vertical controls shall be 0.05 feet multiplied by the square root of the distance through which levels are taken in miles.

6.41.4. PAYMENT. The Engineer may make partial payments for work done hereunder, in his discretion, based upon the approved breakdown of the lump sum price bid, which is provided for elsewhere in the contract. The total payment, hereunder, including that on the Final Certificate, shall not exceed the lump sum price bid.

6.41.5. PRICE TO COVER. The lump sum price bid shall cover the cost of furnishing all labor, surveyors, Professional Engieer or Land Surveyors, materials, plant, equipment of all kinds, insurance, and necessary incidentals required and completing the work in accordance with the Contract Drawings, the specifications and the directions of the Engineer.

Payment will be made under:

Item No.	Item	Pay Unit
6.41	LINE AND GRADE SURVEYS	LUMP SUM

SECTION 6.42 - Beam Barriers For Dead-End Streets

6.42.1. INTENT. This section describes constructing beam barriers, of the several types, for dead-end streets.

6.42.2. DESCRIPTION. Barriers shall be as shown on New York City Department of Transportation's Standard Details of Construction Standard Drawing No. H-1022 and shall consist of corrugated steel rail elements mounted one above the other on steel posts. Posts shall be driven into sand-filled steel shells and shells then capped with concrete, except as otherwise provided. Rail elements shall be painted with alternate reflectorized and non-reflectorized stripes; and terminal sections affixed to rail elements at ends of barriers, shall be painted with an approved reflective coating.

Signs, bearing the legends "DEAD" and "END" shall be mounted on the rail elements, as shown.

6.42.3. MATERIALS. Concrete for capping shells shall be Class C-25, Type II A; cement - Type II Portland; sand - Type 1 A; coarse aggregate - Type 1, Grade B, or Type 2, Size No. 57; and an approved air-entraining agent shall be added at the time concrete ingredients are mixed with water.

All steel components, including hardware but excepting steel shells, shall be galvanized.

Materials for barrier components shall be as shown on Standard Drawing No. H-1022.

Welds and weldments shall conform to the requirements of the American Welding Society.

6.42.4. METHODS. Except as otherwise directed by the Engineer, excavation for steel shells shall be made to the dimensions and depths required for their installation. After shells are installed they shall be filled with sand, as shown, and the space between the outside of the shells and the sides of the excavation also filled with sand. Sand fill shall be thoroughly compacted to the satisfaction of the Engineer.

Posts shall be centered and driven into the sand-filled shells to the depths required in such manner as not to injure the galvanizing coating.

Rail elements shall be mounted on the posts and secured. Shells shall then be capped with concrete as shown.

The details of assembly of barrier components, the mounting of signs and the stripping and coating of rail elements and terminal sections are shown on New York City Department of Transportation's Standard Details of Construction Standard Drawing No. H-1022.

When barriers are to be placed in sidewalk areas, the top of the steel shells shall be set four (4") inches below proposed sidewalk grade, shells shall be completely filled with sand flush with the adjacent sidewalk and the concrete capping, unless otherwise directed, omitted. The vertical positioning of barrier components, however, shall be maintained, as shown on the Standard Drawing.

6.42.5. MEASUREMENT. The quantities to be measured for payment shall be the number of beam barriers for dead-end streets, of the several types, installed in the work, complete, as specified to the satisfaction of the Engineer.

6.42.6. PRICES TO COVER. The unit prices bid for each of the several types of barriers constructed shall cover the cost of furnishing all labor, materials, plant, equipment, insurance, and necessary incidentals required and completing the work in accordance with the Contract Drawings, the specifications and the directions of the Engineer.

Payment will be made under:

Item No.	Item	Pay Unit
6.42 A01	BEAM BARRIERS FOR DEAD-END STREETS, TYPE 1	EACH
6.42 A02	BEAM BARRIERS FOR DEAD-END STREETS, TYPE 2	EACH
6.42 A03	BEAM BARRIERS FOR DEAD-END STREETS, TYPE 3	EACH
6.42 A04	BEAM BARRIERS FOR DEAD-END STREETS, TYPE 4	EACH
6.42 A05	BEAM BARRIERS FOR DEAD-END STREETS, TYPE 5	EACH
6.42 A06	BEAM BARRIERS FOR DEAD-END STREETS, TYPE 6	EACH
6.42 A07	BEAM BARRIERS FOR DEAD-END STREETS, TYPE 7	EACH
6.42 A08	BEAM BARRIERS FOR DEAD-END STREETS, TYPE 8	EACH
6.42 A09	BEAM BARRIERS FOR DEAD-END STREETS, TYPE 9	EACH
6.42 A10	BEAM BARRIERS FOR DEAD-END STREETS, TYPE 10	EACH
6.42 A11	BEAM BARRIERS FOR DEAD-END STREETS, TYPE 11	EACH
6.42 A12	BEAM BARRIERS FOR DEAD-END STREETS, TYPE 12	EACH
6.42 A13	BEAM BARRIERS FOR DEAD-END STREETS, TYPE 13	EACH
6.42 A14	BEAM BARRIERS FOR DEAD-END STREETS, TYPE 14	EACH
6.42 A15	BEAM BARRIERS FOR DEAD-END STREETS, TYPE 15	EACH
6.42 A16	BEAM BARRIERS FOR DEAD-END STREETS, TYPE 16	EACH
6.42 A17	BEAM BARRIERS FOR DEAD-END STREETS, TYPE 17	EACH
6.42 A18	BEAM BARRIERS FOR DEAD-END STREETS, TYPE 18	EACH

SECTION 6.43 - Photographs

6.43.1. INTENT. This section describes the work of providing a photographic record of contract work.

6.43.2. DESCRIPTION. The work shall consist of the furnishing of all required photographic equipment and materials; the taking of photographs; making enlargements from photographic negatives; and submitting negatives and enlargements to the Engineer.

6.43.3. MATERIALS. Negatives shall be 2-1/4" x 2-1/4" size.

Enlargements shall be 7-1/2" x 9-1/2" image area on 8" x 10" single-weight, gloss paper, and shall be in color.

6.43.4. METHODS. The Contractor shall employ and pay for the services of a competent Professional Photographer who, at the direction of the Commissioner or his authorized representative, shall take Preconstruction Photographs and Construction Progress Photographs and such other photographs which may be required during the period of this Contract.

The Photographer shall be available for taking the required photographs within forty-eight (48) hours after receiving notification from the Commissioner or his authorized representative.

Photographs shall be taken under the supervision and direction of the Engineer and shall show the conditions existing on the work site prior to the commencement of, during the prosecution of, and at the completion of the contract work. The photographs will generally represent views of the original surface conditions of streets, curbs and walks, buildings which show evidence of damage or disrepair, emergency situations, and views of the Work under construction.

The Engineer reserves the right to reject any and all views that are not reasonably clear and definitive. No separate or additional payment will be made for any additional photographs that are required as a result of the rejection of views. The cost shall be deemed included in the prices bid for the various Contract Items.

(A) The number of photographs for Highway projects is estimated to be one hundred and fifty (150) sets per million dollars of street reconstruction work and four (4) sets per two hundred and fifty (250) linear feet of roadway for resurfacing work.

(B) The number of photographs for Sewer and Water Main projects is as follows:

1. A minimum of four (4) sets for every one-hundred (100) linear feet of estimated sewer and water main length will be taken for Construction Progress Photographs.

2. It is estimated, unless otherwise directed by the Engineer due to job size, conditions and complexity, that the average number of Preconstruction Photographs will approximate two (2) sets one (1) each side of street for each twenty-five (25) linear feet of estimated sewer length.

Photographs showing the original condition of all encumbrances and/or encroachments which may be affected by the construction of the proposed sewer and water main related Work shall be taken prior to the start of construction. These photographs shall be in addition to those required above.

The Contractor shall furnish to the Commissioner one (1) set for each view taken, each set consisting of two (2) 8" x 10" prints and one (1) negative. Prints shall be inserted in standard weight Archival Quality clear poly sheet protectors and submitted in a hard cover three (3) ring binder. The following information shall be imprinted, or indelibly printed, on a white border measuring no more than one and one half (1-1/2") inch at the bottom of the front of each photograph:

(a) Contract Number and Job Location
(b) Photograph Number
(c) View and Description - (Indicating the location of the camera, a general description of what the photograph represents, and whether it is a Preconstruction Photograph or a Construction Progress Photograph.)
(d) Date - (The date the photograph was taken.)
(e) Name of Photographer
(f) Department Witness

Each negative shall be numbered accordingly to correspond to the photograph and shall be inserted in Archival Negative Preservers.

All photographs and negatives shall become the property of the Commissioner. All completed photographs shall be delivered to the Resident Engineer or Project Manager, Department of Design and Construction, within two (2) week after the photographs have been taken.

Approved binders for the vinyl photo pages containing the enlargements shall be furnished by the Contractor and delivered to the designated construction office at the time of the initial submission of enlargements and at such other times as may be required thereafter.

6.43.5. MEASUREMENT. The quantity to be measured for payment shall be the number of sets, each set consisting of a negative and the two (2) enlargements made from the negative, of Preconstruction Photographs including photographs showing the original condition of all encumbrances and/or encroachments which may be affected by construction of the proposed Work, and which are delivered as directed by the Engineer.

6.43.6. PRICE TO COVER. The contract price bid per set shall cover the cost of furnishing all labor, materials, plant, equipment, insurance, and necessary incidentals required, including the cost of the photographer, and the cost of furnishing the required ring binders, and completing the work in accordance with the specifications and the directions of the Engineer.

No separate payment will be made for Construction Progress Photographs. The cost of taking and providing sets of Construction Progress Photographs, as required by the Engineer, shall be included in the prices bid for all other items of work.

Payment will be made under:

Item No.	Item	Pay Unit
6.43	PHOTOGRAPHS	SET

SECTION 6.44 - White and Yellow Thermoplastic Reflectorized Pavement Markings

6.44.1. INTENT. This section describes the furnishing and application of hot extruded reflectorized white and yellow thermoplastic pavement markings, for lane lines, centerlines, gore lines, edge lines, shoulder striping, etc., in specified constant widths and at locations indicated on the Contract Drawings, or as ordered by the Engineer.

6.44.2. DESCRIPTION. Under this section the Contractor shall be required to clean and prime the pavement surface and to apply the markings on the surface.

6.44.3. MATERIALS. The markings shall be a reflectorized thermoplastic pavement striping material, hereinafter referred to as "composition," of a type that is applied to the pavement surface in a molten state by mechanical means with surface application of glass beads and which, upon cooling to normal pavement temperature, produces an adherent reflectorized stripe of a specified constant width and of a uniform cross-section, between 1/8" and 3/16" in thickness, and is capable of resisting deformation.

(A) COMPOSITION REQUIREMENTS

The thermoplastic composition shall be specifically formulated for application at temperatures greater than 400° F. The components in the composition shall show no significant breakdown, or deterioration at 475° F.

The binder component shall be formulated as a hydrocarbon resin; or it shall be formulated as a mixture of high boiling point nonhydric primary alcohol and modified maleic resin. The pigment, beads and filler shall be uniformly dispersed in the binder resin.

The thermoplastic composition shall be free from all skins, dirt and foreign objects and shall comply with the following requirements:

	% by Weight	
Component	White	Yellow
Binder	17.0 min.	17.0 min.
Titanium Dioxide	10.0 min.	--
Glass Beads	20.0 min.	20.0 min.
Calcium Carbonate & Inert Fillers	49.0 max.	*
Yellow Pigments	--	*

* *Amount and type of yellow pigment, calcium carbonate and inert fillers shall be at the option of the manufacturer, providing the other composition requirements of this specification are met.*

(B) PHYSICAL PROPERTIES OF COMPOSITION

1. Color. White thermoplastic composition, as placed, shall be white, free from dirt or tint.

   Yellow thermoplastic composition, as placed, shall be yellow, free from dirt or tint and shall be a reasonable visual match to Munsell Book Notation 10Yr8/14 (ASTM D 1535).

2. Drying Time. When installed at 70°, and in thicknesses between 1/8 and 3/16", the composition shall be completely solid and shall show no damaging effect from traffic after ten (10) minutes.

3. Yellowness Index. White thermoplastic composition shall not exceed a yellowness index of 0.12 when tested in accordance with AASHTO Designation T-250.

4. Softening Point. The composition shall have a softening point of not less than 194° F when tested in accordance with ASTM E 28.

5. Specific Gravity. The specific gravity of the composition as determined by a water displacement method of 25° C shall be between 1.9 and 2.2 (referred to water at 25° C).

(C) REFLECTIVE GLASS BEADS (PRE-MIX AND DROP-ON)

Reflective glass beads for use in the composition and for drop-on shall conform to the following requirements:

1. The glass beads shall be colorless; clean; transparent; free from milkiness or excessive air bubbles; and essentially clean from surface scarring or scratching. They shall be spherical in shape and at least 70% of the glass beads shall be true spheres when tested in accordance with ASTM D 1155.

2. The refractive index of the spheres shall be a minimum of 1.50 as determined by the liquid immersion method at 25° C.

3. The silica content of the glass spheres shall not be less than 60%.

The crushing resistance of the beads shall be as follows: A forty (40) pound dead weight, for 20 to 30 mesh spheres.

The glass beads shall have the following grading when tested in accordance with ASTM D 1214:

U.S. Standard Sieve	Mass % Passing
No. 20	100
No. 30	79-95
No. 50	15-60
No. 80	0-15

Glass beads for drop-on shall be treated with a moisture-proof coating.

(D) PRIMER

1. Type I Primer. This primer shall be for use on bituminous concrete pavement surfaces only, and meet the following requirements:

   Type I primer shall be a thermosetting adhesive, with a solids content of pigment reinforced synthetic rubber and synthetic plastic resin dissolved and/or dispersed in a volatile organic solvent. The solids content shall not be less than 10% by weight, and at 70° F and 60% R.H., a wet film thickness of 5 $\pm$ 1 mils shall dry to a tack-free condition in less than five (5) minutes.

2. Type II Primer. This primer shall be for use on either bituminous concrete or Portland cement concrete pavement.

   Type II primer shall be a two component epoxy adhesive and meet the following requirements:

	Part A	Part B
Weight per gallon, min.	8.10 lbs.	7.40 lbs.
Epoxide Equivalent of Solids	185 - 200	
Pot life of Mixture @ 72° F (in closed container)	24 hours	

The reactive solids content of the mixed epoxy primer (Part A and Part B) shall be 50%, minimum, by weight. The reactive solids content shall be determined by blending one (1) part by weight of Part A with one (1) part by weight of Part B and allowing this mixture to react. A solids content of this reacted mixture shall then be determined after constant weight is reached in an oven at 105° C.

The field mixing ratio for application of the Type II epoxy primer shall be two (2) Parts A to one (1) Part B, by volume.

(E) In addition, the materials furnished shall meet the following requirements:

1. Composition shall be packed in slab form in individual boxes.

2. Each packaged unit shall be identified by the manufacturer's name, manufacturing designation, date of manufacture, and color. Each shipment shall be accompanied by a notarized certification from the supplier certifying that the material is in conformance with the material specifications designated herein. Samples may be required to be submitted to the Engineer for tests and approval prior to its use. Materials received without a notarized certification, or materials which fail to pass the test, shall not be used and shall be removed from the site of the work.

3. Composition shall be reusable on the job site without deterioration of useful properties when subjected to three reheatings to its application temperature, and after being held at such temperature for one hour during each reheating.

4. All materials shall be composed of 100% pure virgin stock. No scrap or reprocessed materials may be used.

5. The composition when installed on and supported by pavement shall:

    a. be textured so as not to be slippery when wet.

    b. adhere securely to the pavement under repeated freezing and thawing.

    c. not discolor on prolonged exposure to sunlight.

    d. not crack, chip or craze.

    e. not spread or smear at temperatures at or below 140 Degrees F.

    f. not deteriorate by contact with sodium chloride, calcium chloride, cinders or other similar pavement ice preventatives, or by contact with lubricant or fuel drippings from vehicles.

6. Thermoplastic material shall not give off toxic fumes which are harmful to persons or property when it is heated to application temperature.

6.44.4. METHODS.

(A) GENERAL

Any pavement upon which two-way traffic will be maintained shall be properly marked with a centerline pavement lane marking before nightfall or the end of the working day, whichever comes sooner. In order to comply with this requirement, the Contractor may furnish and apply a temporary painted pavement marking in accordance with the requirement of Section 6.49. But where neither Temporary Painted Pavement Markings nor the final Thermoplastic Reflectorized Pavement Markings can be immediately installed as directed, the Contractor shall be required to furnish, install, maintain, and remove, when directed, rubber cones or other treatment deemed appropriate by the Engineer to safely maintain traffic at no additional cost to the City.

All final Thermoplastic Reflectorized Pavement Markings shall be installed as directed by the Engineer within 14 days after paving each block. Should the Contractor fail to install said final Thermoplastic Reflectorized Pavement Markings within 14 days after paving due to atmospheric conditions being inappropriate for satisfactory results as determined by the Engineer, he shall be required to install <u>all</u> pavement markings (e.g. edge lines, ten foot broken lines, stop bars, cross walks and arrows) using temporary painted pavement markings. Said temporary painted pavement marking shall be maintained

as directed until the final Thermoplastic Reflectorized Pavement Markings are installed under this item. Maintenance of temporary painted pavement markings shall be done by re-applying the painted pavement markings where directed by the Engineer. Payment for the application of temporary painted pavement markings and each re-application, as may be directed, will be made in accordance with the requirements of Section 6.49.

Failure to meet this requirement shall be deemed a substantial deficiency in compliance with the specification requirements of Section 1.06.44(I) of the General Conditions, and will be cause for assessment of liquidated damages stipulated therein.

Where necessary, the Contractor shall establish marking line points at 25-foot intervals throughout the length of pavement, or as directed by the Engineer. Before any work is begun, a schedule of operations shall be submitted for the approval of the Engineer.

Thermoplastic reflectorized pavement markings applied to bituminous concrete pavements shall be placed over a thermosetting adhesive primer placed at a wet film thickness of approximately 5±1 mils (265-400 sf/gal).

On Portland cement concrete pavements, the primer shall be of an epoxy resin type, applied at a temperature range of between 55 and 110 Degrees F. and at a wet film thickness of between 4 and 5 mils or at a rate of 320-420 square feet per gallon. The marking material shall not be applied until the epoxy resin primer reaches a tacky condition (approximately 15 minutes under normal conditions). To shorten the curing time of the epoxy resin, an infrared heating device may be employed.

The thermoplastic material shall be applied to the pavement at composition temperatures no lower than 400 Degrees F. nor higher than 425 Degrees F. at the point of disposition. Marking shall be done only in seasonable weather in accordance with good practice and in a neat, workmanlike manner. Immediately after installation of the composition, drop-on glass beads shall be mechanically applied while still sufficiently molten such that the beads will be held by and mechanically imbedded in the surface of the composition, in order to provide immediate night reflectivity.

The work included herein shall be pleasing to the eye, and shall be kept straight and aligned. Spilling of marking material will not be tolerated, especially if due to carelessness or lack of skill on the part of the Contractor, and must be removed by the Contractor. The line, or portion thereof, shall be protected from both vehicle and pedestrian traffic by use of adequate warning devices, until thoroughly past the point of tracking or smearing.

The Engineer's decision as to the acceptability of any installed line shall be final and binding on all parties to the contract. The Engineer may, at his discretion, require the Contractor to remove all extraneous marks on the pavement made by the agents or employees of the Contractor. Unacceptable lines, damaged by others due to improper protection, or poor workmanship, poor appearance, poor performance, poor materials, improper width or improper alignment shall be reworked by the Contractor at no cost to the City to the satisfaction of the Engineer, within fifteen (15) days after written notification of the rejection of such completed work is received by him.

When raised reflectorized pavement markers exist, special care shall be taken to prevent the reflector from being covered by the thermoplastic material. Any reflectors so damaged shall be replaced by the Contractor at no cost to the City.

(B) SURFACE PREPARATION OF PAVEMENT

The Contractor shall be responsible for cleaning the pavement, to the satisfaction of the Engineer, such that at the time of application the pavement surface shall be free of oil, dirt, grease, concrete curing compounds and other foreign contaminants. Concrete curing compounds shall be removed by sandblasting or grinding the pavement surface.

The pavement shall be dry, to the satisfaction of the Engineer, before installation will be permitted (surface dry only, shall not be considered an acceptable condition). At the time of installation, the pavement surface temperature shall be a minimum of 55 Degrees F. and the ambient temperature shall be a minimum of 49 Degrees F. and rising. The Engineer shall be the sole determiner as to when atmospheric conditions are such as to produce satisfactory results (See Note 1).

(C) EQUIPMENT

1. Pavement Cleaning Equipment. Equipment must be provided to insure removal of dust, debris, and other foreign matter from the pavement immediately prior to the application of primer and subsequent installation of composition.

2. Primer Applicating Equipment. Application of primer shall be accomplished using equipment having the following features:

a. The main storage tank shall be equipped with a visible gauge which will allow the Engineer to readily ascertain the rate of application.

b. The main storage tank shall be equipped with a heating device which will maintain the primer at a constant efficient temperature.

c. The spray nozzle shall be protected from the action of wind to insure placement where needed.

3. Thermoplastic Melting Equipment. A special kettle mounted on a mobile unit is required for melting and heating the composition. Such equipment shall incorporate the following features:

a. The kettle shall be of sufficient capacity to satisfy the minimum installation requirements of the composition as specified hereinafter.

b. The kettle shall provide means of heating the composition by means of thermostatically controlled heat transfer liquid rather than by direct flame, so as to provide positive temperature control and prevent overheating of the composition.

c. Suitable temperature gauges to indicate liquid and composition temperatures at all times shall be provided in the kettle.

d. The kettle shall provide means of continually agitating the composition while the composition is being heated.

e. The kettle shall have a means of rapidly and efficiently discharging the liquid composition into appropriate application equipment.

f. The kettle shall be so equipped that, at the point where the liquid composition is discharged into the application equipment, a suitable temperature gauge shall be mounted in such a manner that the temperature of the liquid composition, at the point of discharge, shall be easily read at all times.

Note 1: To comply with the 55 Degrees F. pavement surface temperature requirement, the Contractor shall schedule this striping work for seasons of warm weather. In cooler conditions, if so ordered and at locations directed by the Engineer, the Contractor shall, temporarily, furnish and apply painted pavement markings complying with the requirements of Section 6.49 of the contract. Unless otherwise specified, payment therefor will be made at the unit price bid for Item No. 6.49 in the contract. Then at a later date when the pavement surface temperature is acceptable, as determined by the Engineer, the Contractor shall place the permanent thermoplastic markings over the temporary painted markings in a satisfactory manner.

g. The kettle shall be equipped and constructed in such a manner so as to satisfy the requirements of the National Board of Fire Underwriters and the appropriate agencies of the City of New York.

4. Thermoplastic Applicating Equipment. Equipment shall be provided to place the composition on the pavement as a finished line, and shall include the following features:

a. The applicator shall provide agitation for the composition prior to its actual installation.

b. Applicator shall provide means of maintaining the composition at its proper application temperature (not lower than 400 Degrees F. nor higher than 425 Degrees F.).

c. Applicator shall maintain uniformity of specified width, and thickness of not less than 1/8" nor more than 3/16" of generally uniform cross-section.

d. Applicator shall provide a means of cleanly cutting off the ends of each length of line.

e. Applicator shall be capable of providing lines of variable widths by use of easily interchangeable parts.

f. Applicator shall be provided with a bead dispenser capable of uniformly dispensing reflective glass beads at controlled rates of flow. The bead dispenser shall be automatically operated in such a manner that it will only dispense beads while the composition is being applied. The beads shall be dispensed at a rate of one (1) pound per 20 square feet of composition.

g. Applicating equipment shall be of two general types:

Portable applicator - The portable applicator, capable of being propelled by the operator, shall be a device typically used for traffic line installations such as crosswalk lines, stop bars, and short lane, edge and center lines. The applicator shall be easily maneuverable and so constructed as to permit the installation of curved lines.

Mobile applicator - The mobile applicator shall contain equipment to provide for the automatic installation of skip lines in any combination of line and skip up to 40 feet. The mobile applicator shall be moved in conjunction with the melting and heating kettles in such a manner as to provide continuous highway operation of the kettles and the mobile applicator as an integral unit. The mobile applicator shall be capable of installing from 15,000 to 20,000 linear feet of line in an 8-hour day.

h. The applicators shall be equipped and constructed in such a manner so as to satisfy the requirements of the National Board of Fire Underwriters and the appropriate agencies of the City of New York.

6.44.5. MEASUREMENT. The quantity to be measured for payment shall be the actual number of linear feet of 4" wide pavement markings measured along the centerline of the surface stripe. No payment will be made for the number of linear feet of skips in dashed lines. Payment for markings wider than 4" will be made at the contract price per linear foot of the 4" line multiplied by the factor

$$\frac{\text{Actual Width of Marking (Inches)}}{4}$$

6.44.6. PRICE TO COVER. The contract price per linear foot of 4" wide pavement markings, white and/or yellow, shall cover the cost of all labor, materials, plant, equipment, insurance, and necessary incidentals required, including cleaning, sandblasting or grinding, where required, preparation of surfaces, priming, and application of striping materials, all in accordance with the Contract Drawings, the specifications and the directions of the Engineer.
Payment will be made under:

Item No.	Item	Pay Unit
6.44	THERMOPLASTIC REFLECTORIZED PAVEMENT MARKINGS (4" WIDE)	L.F.

SECTION 6.45 (VACANT)

SECTION 6.46 - Dense-Graded Stone Base

6.46.1. INTENT. This section describes the construction of a dense-graded stone base.

6.46.2. DESCRIPTION. Dense-graded stone base shall consist of the furnishing and placing of broken stone in the places designated on the Contract Drawings, and in such other locations as field conditions require. The thicknesses and locations of the "dense-graded stone base" shall be as shown on the Contract Drawings, or as determined by field conditions and ordered by the Engineer.

6.46.3. MATERIALS. All materials for this work shall be of sound, hard, durable, broken stone or mechanically crushed recycled concrete, free from any organic or other deleterious material (broken asphalt will not be acceptable). Prior to the placement of any base material, the Contractor shall submit a representative sample to the Engineer and obtain approval, in writing. The material shall meet the following gradation requirements:

Sieve Size	Percent Passing (By Weight)
1 inch	100
1/2 inch	75-90
No. 4	40-55
No. 8	30-45
No. 30	16-27
No. 50	12-19
No. 200	3-7 (Dry Analysis)

The quality of the stone particles shall be determined by the Magnesium Sulphate Soundness Test. The maximum percent loss at 4 cycles, by weight, shall be 20.

Should, at any time during work and for any reason, the material fail to conform to the specified quality and gradation requirements, the Contractor shall, by the addition of selected acceptable material, and/or satisfactory manipulation, produce a material meeting the above requirements.

6.46.4. METHODS. The material shall be spread in equal thickness layers. The spreading of any layer of this material shall be done with spreader equipment approved by the Engineer, and shall be spread to such thickness that the maximum depth of the layer, after compaction, will be six (6") inches. Spreading from piles dumped on the roadway will not be permitted. No segregation of large or fine particles will be allowed, but the material, as spread, shall be well graded, with no pockets of fine material. Water shall be added in such amounts as the Engineer may consider necessary to obtain satisfactory compaction.

When the moisture content of the layer is within the limits for proper compaction, the entire surface shall be rolled with a pneumatic tired roller, having an operating weight of between 1,000 and 2,500 pounds per tire, or a smooth steel wheel roller, having a minimum weight of ten (10) tons. Each portion of the layer shall be covered by a minimum of eight (8) passes of the roller.

For heavier, vibratory or more efficient types of approved compaction equipment, the minimum number of passes required on all portions of each layer shall be determined by the Engineer after appropriate field tests to evaluate the efficiency of such equipment. In limited areas, where the use of a roller is impractical, approved vibrating plate compactors or impact rammers shall be used to compact the material.

After compaction, the top surface of this base shall not extend above, nor more than 1/2 inch below, true grade and surface at any location. The base, at any location, shall be compacted, finished and completed to the above tolerance and approved by the Engineer, before any succeeding pavement course is placed at that location. Any depressions or holes shall be filled with approved coarse sand or screenings and the surface re-rolled.

In all cases, the stone base must be so thoroughly compacted that it will not weave under the roller.

The width of the layer of the base shall be restricted to that required for placement of the lane being paved and shall not be laid in excess of 500 linear feet without being compacted. No traffic, or hauling other than that necessary for bringing material for the next course, shall be permitted over this base. Should the subgrade, subbase, or any other material become churned up into, or mixed with the base, for any reason whatsoever, the Contractor shall, at his own expense, remove such mixtures and replace with dense-graded stone acceptable for this item.

The Contractor shall assume full responsibility for any contamination and/or degradation of any part of this base during construction and shall, at his own expense, remove any and all portions of this base which do not conform to the requirements of these specifications and replace these portions with specified material.

6.46.5. MEASUREMENT. The quantity to be measured for payment shall be the number of cubic yards of compacted material placed as shown on the Contract Drawings or as ordered by the Engineer, in accordance with the specifications.

6.46.6. PRICE TO COVER. The contract price bid per cubic yard shall cover the cost of all labor, materials, equipment, insurance, and necessary incidentals required and completing the work in accordance with the Contract Drawings, the specifications and the directions of the Engineer. No direct payment will be made for any losses of material which may result from shrinkage, compaction, foundation settlement, waste, overflow, erosion, leakage, or any other causes; the cost of such losses shall be included in the price bid for this item.

Payment will be made under:

Item No.	Item	Pay Unit
6.46	DENSE-GRADED STONE BASE	C.Y.

SECTION 6.47 - Interlocking Concrete Pavers

6.47.1. DESCRIPTION. This section describes the furnishing and installation of interlocking concrete pavers.

6.47.2. MATERIALS.

(A) INTERLOCKING CONCRETE PAVERS. Interlocking concrete pavers shall be of the range of colors, size, shape, intensity, and surface texture of the pavers as shown on the Contract Drawings, subject to the approval of the Engineer.

Pavers shall have a minimum compressive strength of 7,000 psi.

(B) BITUMINOUS SETTING BED. Asphalt cement to be used in the bituminous setting bed shall conform to ASTM Designation D 946 with a Penetration Grade of 85 - 100.

The fine aggregate to be used in the bituminous setting bed shall be clean, hard sand with durable particles and free from adherent coatings, lumps of clay, alkali salts, and organic matter. It shall be uniformly graded from "coarse" to "fine" and all passing the No. 4 sieve and meet the gradation requirements when tested in accordance with the standard method of test for sieve or screen analysis of fine and coarse aggregates ASTM Designation C 136.

The dried fine aggregate shall be combined with hot asphalt cement, and the mix shall be heated to approximately 300 degrees Fahrenheit at an asphalt plant. The approximate proportion of materials shall be seven and one-half (7-1/2%) percent cement asphalt, eighty-seven and one-quarter (87-1/4%) percent sand, and five and one-quarter (5-1/4%) percent mineral filler. Each ton shall be apportioned by weight in the approximate ratio of 150 lbs. asphalt to 1,745 lbs. sand and 105 lbs. mineral filler. The Contractor shall determine the exact proportions to produce the best possible mixture for construction of the bituminous setting bed to meet construction requirements.

(C) NEOPRENE TACK COAT. Neoprene Tack Coat shall be as approved by the Engineer.

(D) SAND. Sand shall be Type IA in accordance with Section 2.21.

The Contractor shall submit four sample pavers of each color and shape clearly identified by the manufacturer's name, date of production and contract number and these sample pavers shall represent the range of colors to be produced, the size, shape, intensity and surface texture of the pavers he/she plans to use in the work. Pavers with discoloration, cracks, honeycombs, and extreme surface irregularities shall not be considered acceptable as samples. The Contractor shall hand deliver samples to Department of Design and Construction, Infrastructure Division, Bureau of Design at 30-30 Thomson Avenue, Long Island City, New York 11101, with transmittal letter and obtain a signed receipted acceptance of delivery. There will be no material delivery to job site without prior written approval; all material delivered to site without such approval shall be rejected. Contractor shall submit samples in sufficient time as to not delay progress of Construction.

6.47.3. METHODS. Concrete base for pavers shall be installed at proper elevation to accept pavers and bituminous setting bed. Pavers shall be laid, on a 3/4 inch setting bed, in straight courses with hand tight joints and uniform top surfaces, keeping good alignment and starting rows alternately with full and half pavers, or according to pattern shown on the Contract Drawings. Newly laid pavers must be protected at all times by panels of plywood on which the paver stands. These panels can be advanced as work progresses; however, the plywood protection must be kept in areas which will be subjected to the continued movement of material and equipment. These precautions must be taken in order to avoid depressions and protect paver alignment. Black and White pavers shall be installed at crosswalks.

(A) PLACING BITUMINOUS SETTING BED

The concrete base shall be sufficiently cured prior to installation of the bituminous setting bed as approved by the Engineer. To install the setting bed over the surface of the base, place 3/4 inch deep control bars directly over the base. If grades must be adjusted, set wood chocks under depth control bars to proper grade. Set two bars parallel to each other approximately eleven (11') feet apart to serve as guides for striking board (12' long 2" x 6" board). The depth control bars must be set carefully to bring the pavers, where laid, to proper grade.

Place some bituminous bed between the parallel depth control bars. Pull this bed with the striking board over these bars several times. After each passage, low porous spots must be showered with fresh bituminous material to produce a smooth, firm and even setting bed. As soon as this initial panel is completed, advance the first bar to the next position in readiness for striking the next panel. Carefully fill up any depressions that remain after removing the depth control bars and wood chocks.

The setting bed shall be rolled with an approved hand roller after the bed has cooled to eliminate a spongelike surface.

A coating of two (2) percent neoprene modified asphalt adhesive shall be applied by mopping or squeegeeing or troweling over the top surface of the bituminous setting bed so as to provide a bond under the pavers. If it is troweled, the trowel shall be serrated with serrations not to exceed one-sixteenth (1/16) of an inch. Minimum adhesive thickness shall be 1/16 inch.

(B) INSTALLATION OF CONCRETE PAVERS

Pavers shall also be adequately protected from discoloration, due to adjacent paving operations, by an approved method.

The pavers should be placed at right angles with the center of the paving surface. Alignment should be verified periodically.

The pavers should be arranged with the rows touching so that the "ends" of the pavers will form the proper corresponding angle and the proper distance between "ends" not to exceed 1/8 inch.

A plate vibrator should be used to compact and level the pavers after they have been installed. It is important that the correct type and size compactor be used.

(C) JOINT TREATMENT

After the pavers are laid, sand is to be swept into the hand tight joints until the joints are filled.

All uncompleted edges and end of pavers shall be adequately braced and/or retained at the end of each workday with temporary asphaltic concrete mixture or other approved method.

All cutting and setting of pavers shall progress with the setting operation. Under no circumstances shall area requiring cut pavers be permitted to remain at the end of each work day.

When asphaltic concrete wearing course is cut and removed for pavers, no over cut shall be permitted. Pavers shall fit snugly between cut pavements with no more than 1/8" edge space.

6.47.4. MEASUREMENT.

(A) FURNISH INTERLOCKING CONCRETE PAVERS

The quantity to be measured for payment shall be the number of square feet of Interlocking Concrete Pavers furnished and delivered to the site, measured in place. This area shall be equal to the area of installed concrete pavers measured under Item 6.47 B.

(B) INSTALL INTERLOCKING CONCRETE PAVERS

The quantity to be measured for payment shall be the number of square feet of Interlocking Concrete Pavers actually installed measured in place.

6.47.5. PRICES TO COVER.

(A) FURNISH INTERLOCKING CONCRETE PAVERS

The contract price bid for Furnish Interlocking Concrete Pavers shall be a unit price per square foot and shall cover the cost of all labor, materials, plant, equipment, and incidentals necessary to furnish and deliver interlocking concrete pavers to the work site.

(B) INSTALL INTERLOCKING CONCRETE PAVERS

The contract price bid for Install Interlocking Concrete Pavers shall be a unit price per square foot and shall cover the cost of all labor, materials, plant, equipment, insurance, and incidentals necessary to install interlocking concrete pavers in designated areas including the cost of furnishing and installing bituminous setting bed, neoprene modified asphalt adhesive, joint filler and all other incidental work, all in accordance with the Contract Drawings, the specifications and the directions of the Engineer.

Payment will be made under:

Item No.	Item	Pay Unit
6.47 A	FURNISH INTERLOCKING CONCRETE PAVERS	S.F.
6.47 B	INSTALL INTERLOCKING CONCRETE PAVERS	S.F.

SECTION 6.48 - Curb Painting

6.48.1. INTENT. This section describes the work of the painting of curbs.

6.48.2. DESCRIPTION. The work shall consist of the furnishing of paint materials and the application of three (3) coats of paint to steel faced curbs at bus stops and two (2) coats of paint to concrete curb at bus stops in accordance with the Contract Drawings, the specifications, and the directions of the Engineer.

6.48.3. MATERIALS. The types of paint to be used are as follows:

(A) Prime coat shall consist of epoxy primer. The list of acceptable manufacturers of the epoxy primer is shown in **Subsection 2.13.4**.

(B) Traffic paint (yellow) shall comply with the Federal Specifications TT-P-115 Class B, Type 1, Alkyd.

The types of brushes and airless sprayers which the Contractor proposes to use shall be submitted to the Engineer for his approval prior to use in the work.

6.48.4. METHODS. The yellow paint shall be applied to the curb in place at bus stops (length as designated as per the Department of Transportation, Office of Traffic Engineering and Safety Standards). All steel faced curbs to be painted shall receive one (1) prime coat of epoxy primer and two (2) finish coats of traffic paint (yellow). All concrete curb to be painted shall receive two (2) finish coats of traffic

paint (yellow). The curb surface shall be cleaned thoroughly before any paint coat is applied. Cleaning shall include the removal of rust, dirt, oil, grease and other foreign substances. All surfaces shall be swept and dusted so as to be free of loose particles and dust immediately before painting.

All painting shall be done in dry weather or under cover. All surfaces shall be free from moisture or frost when paint is applied, and painted surfaces shall not be permitted to become wet by condensation or otherwise be subjected to freezing temperatures until the paint has reached a hard set. No painting shall be started when the temperature of the metal or the surrounding air is less than 5 degrees F. above the dew point. Any paint injuriously affected by cold, rain, moisture, or condensation shall be entirely cleaned off and fresh paint applied.

All paint shall be stirred to agitate and emulsify the contents thoroughly. The paint shall be kept stirred and at a uniform consistency until applied. There shall be no thinning or modification of the paint except upon and in accordance with the specific approval of the Engineer.

The paint shall be applied either wholly by brush or, if approved by the Engineer, in part by brush and in part by approved airless spray in such a way as to secure an even paint film uniform in thickness, tint and consistency over the entire surface, free from pin holes or excessive brush marks. The paint should be thoroughly dry before the application of successive coats.

Care shall be used to prevent paint dripping, spattering or spraying of finished surfaces, and any such dripping, spattering or spraying shall be cleaned off before the paint has dried. The Contractor shall be fully responsible for any damage to property of any kind which may result from the operations incidental to the application of any paint.

6.48.5. MEASUREMENT. The quantity to be measured for payment shall be the number of linear feet of curb painted, measured along the face of the curb.

6.48.6. PRICE TO COVER. The contract price per linear foot shall cover the cost of all labor, materials, plant, equipment, insurance, and necessary incidentals required and completing the work in accordance with the Contract Drawings, the specifications and the directions of the Engineer.

Where there is no scheduled Item for this work, the cost shall be deemed included in the unit prices bid for all scheduled items.

Payment will be made under:

Item No.	Item	Pay Unit
6.48	CURB PAINTING	L.F.

SECTION 6.49 - Temporary Pavement Markings

6.49.1. DESCRIPTION. Under this section, the Contractor shall furnish, apply and when so ordered, remove temporary pavement markings where shown on the Contract Drawings, or directed by the Engineer, in accordance with the requirements of these specifications.

6.49.2. MATERIALS. Temorary pavement markings shall consist of reflectorized pavement marking paints, removable reflectorized pavement marking tape, or non-removable reflectorized pavement marking tape. Removable reflectorized pavement marking tape shall be selected from the N.Y. State Department of Transportation (NYSDOT) Approved List of “Removable Reflectorized Pavement Markings”. Pavement marking paints shall be premixed traffic zone reflective paint, complying with the

requirements of Federal Specification TT-P-115 “Paint, Traffic, Highway, White and Yellow”. Non-removable pavement marking tape shall be specifically designed for use as a pavement marking and shall be as approved by the Engineer prior to application. All line segments shall not be less than four (4”) inches nor greater than six (6”) inches in width, and colors shall be as specified in the National Manual on Uniform Traffic Control Devices for Streets and Highways (National MUTCD) plus the New York State Supplement (NYS Supplement).

6.49.3. METHODS.

(A) GENERAL

The Contractor shall furnish, apply, maintain, and when so ordered, remove the temporary pavement markings, where shown on the Contract Drawings or where directed by the Engineer, in accordance with this section. Any pavement upon which traffic will be maintained shall be properly marked before nightfall or the end of the working day, whichever comes sooner, in accordance with this section.

Before any pavement marking work is begun a schedule of operations shall be submitted to and approved by the Engineer.

When pavement markings are applied under traffic, the Contractor shall provide all the necessary flags, signs, cones, shadow vehicles, flashing arrow boards, etc., to maintain and protect traffic, to protect the work operation, and to protect the painted pavement markings until thoroughly dry and serviceable. No additional payment will be made for these items. The application of pavement markings shall be done in the general direction of traffic. Striping against the direction of normal flow of traffic shall not be allowed.

The Contractor shall be responsible for cleaning the pavement of dust, dirt, and other foreign material which may be detrimental to the adhesion of the paint film or tape. When required by the Engineer, the Contractor shall establish marking line points at thirty (30’) foot intervals throughout the length of the pavement, or as directed by the Engineer, to control the lateral position of the line.

The Contractor shall be responsible for removing, to the satisfaction of the Engineer, all tracking marks, spilled paint, and paint applied in unauthorized areas.

(B) PAVEMENT MARKINGS FOR PERIODS LESS THAN FOURTEEN (14) DAYS

Where pavement markings are expected to remain in place for periods not longer than fourteen (14) days, they shall be installed and maintained in accordance with the patterns and colors indicated below:

a. Yellow broken lines, partial barrier lines and full barrier lines used to separate opposing traffic flows on two-way roadways.

b. White broken lane lines to separate traffic flows in the same direction on multi-lane highways.

Stop bars, hatch lines and edge lines will not normally be required but may be ordered by the Engineer. Broken lines may be as short as four (4) feet. Pavement markings as described above, will be considered acceptable as the only pavement markings in place for periods not longer than fourteen (14) days.

(C) PAVEMENT MARKINGS FOR PERIODS MORE THAN FOURTEEN (14) DAYS

Within 14 days after paving, if the Contractor fails to install either the succeeding pavement course or the final pavement markings on contracts with pay items for such, the pavement markings installed for periods of less than fourteen (14) days shall be supplemented with edge lines, ten foot broken lines, stop bars, cross walks and arrows, as directed by the Engineer.

Removable tape may be used as pavement markings for solid and broken lines on any pavement course. However, on the final pavement surface, it shall be offset, if possible, from the location of the final mark in order to prevent interference with the adhesion of the final mark.

Pavement marking paint may be used as pavement markings for solid and broken lines on all underlying pavement courses (i.e. base, binder, leveling and shim). On top course, or final pavement surface, paint may only be used if the final marking pattern is known prior to paving and the contract does not contain durable markings (i.e. thermoplastic marks) or when Item No. 6.44, Thermoplastic Reflectorized Pavement Markings, cannot be placed due to the pavement surface temperature requirements. Where paint is used on the final pavement surface, it shall be applied in the final location.

Non-removable tape may be used as pavement markings only for broken lines on underlying pavement courses. Non-removable tape will not be allowed to mark barrier lines on any pavement course.

If paint is used for pavement markings, the methods of application and mixing of paint shall be in accordance with the manufacturer's instructions and the approval of the Engineer. The Contractor shall follow for the new pavement markings the same pattern, color and widths of pavement markings as are on the existing roadway surfaces, unless otherwise shown on the Contract Drawings or directed by the Engineer. .

Any pavement markings that fail to adhere to the pavement, become abraded, dislodged by snowplowing, or in the opinion of the Engineer become ineffective in any manner during the "period of use" shall be replaced by the Contractor at no additional expense to the City. The "period of use" shall be defined as the time from when the pavement markings are first applied to the time when the pavement markings are either paved over, the project's permanent markings are applied, or contract acceptance, whichever is first. After their period of use, the temporary pavement markings shall be removed from the pavement by the Contractor, if ordered by the Engineer.

(D) APPLICATION OF PAVEMENT MARKINGS

Painted pavement markings shall be applied in workmanlike manner and of first class quality. The markings shall be of uniform width and shall have a uniform thickness of not less than four (4) mils and shall be capable of resisting deformation.

Prior to application of the paint, the surface to be painted shall be cleaned of all oil, grease, dirt, debris and foreign matter, and shall be dry. No paint shall be applied when the roadway surface temperature is below forty (40°) degrees F. or above (85°) degrees Fahrenheit.

If tape is used, it shall be applied to a clean, dry pavement in accordance with the manufacturer's recommendations. Tape shall conform to the shape of, and adhere to the surface upon which it is applied.

All pavement marking materials shall be installed in accordance with the manufacturer's instructions. In addition, pavement marking paints shall be installed according to the following provisions:

Painted pavement markings shall be applied with either atomizing or airless type striping equipment. The striping equipment may be either truck mounted or hand operated, and shall be equipped with glass bead dispensing equipment. The striping equipment shall be compatible with and suitable for the application of the type of paint being used.

At the time of paint application, the pavement surface and ambient temperature shall not be less than 10°C, the relative humidity shall not exceed 85%, and the pavement surface shall be dry. Painted pavement markings shall not be applied during periods of rain or if rain is imminent. Waterborne type paints shall not be applied if rain is expected within 4 hours after the paint

application. Paint shall be applied in strict accordance with the manufacturer's recommendations for use. In no case shall the paint be heated above 65°C.

The painted pavement markings shall be uniformly applied to the pavement surface at the minimum specified wet film thickness. The applied pavement markings shall have clean-cut edges, and true and smooth alignment. Immediately following paint application reflective glass beads shall be uniformly applied to the wet paint film at the rate of 6.25 lbs./gal. (0.75 kg/L) of paint. The Contractor shall immediately follow the glass bead application with a vacuum to remove any spillage of beads on dry pavement that could creat a pedestrian slipping hazard.

On pavements where traffic is to be maintained and the final marking pattern is known, the permanent thermoplastic reflectorized pavement markings shall be applied before nightfall or before the end of the working day, whichever comes sooner, under Item No. 6.44. If the Contractor is unable to apply these final pavement markings, where traffic is to be maintained, then Pavement Markings as described above shall be installed using removable reflectorized pavement markings, offset from the location of the project's final pavement markings, until the permanent thermoplastic reflectoized pavement marking are installed.

(E) MAINTENANCE OF PAVEMENT MARKINGS

The Contractor shall be responsible for maintaining and re-appying, as may be required, the temporary pavement markings for the duration of the temporary traffic pattern or detour, or a maximum of six (6) months from the time of placement.

Any marking material that fails to provide for any reason, both satisfactory daytime and nighttime delineation, in the opinion of the Engineer, shall be replaced immediately by the Contractor, at no additional cost to the City when within six (6) months of application or as a pay item when re-applied after six (6) months of first application. Replacement shall, as a minimum, be required for the following degrees of material loss:

1. Removable Tape. Any gap exceeding fifty (50') feet in length in a solid line, or loss of shorter segments exceeding ten (10%) percent of the total length in any eight hundred (800') feet segment of solid line, or more than two (2) consecutive segments of broken line.

2. Traffic Paint. Abrasion of the line such that more than 10 percent of the underlying pavement is visible within any segment of broken line or within any three hundred (300') feet section of solid line; failure of any line to be clearly visible at night under low-beam headlamp illumination when viewed from a distance of two hundred (200') feet.

(D) REMOVAL OF PAVEMENT MARKINGS

Temporary pavement markings used to delineate temporary traffic patterns shall be removed at the completion of that phase of the work and prior to the installation of the next temporary pattern, or return to the permanent pattern.

Traffic paint shall be removed by mechanical means subject to their ability to achieve satisfactory results. After removal, there shall be no paint residue or pavement scarring that conflicts with successive pavement markings under any viewing conditions - wet or dry, day or night.

Marking tapes shall be removed, intact or in large pieces, using manual methods or a mechanical roll-up device. The use of heat, solvents or other chemicals, grinders, or blasters will not be allowed on top-course pavement that is to remain in place without overlaying, or on other pavement surfaces where subsequent temporary traffic patterns are to be placed. After removal, there shall be no resultant damage to or permanent marks or scars on the pavement surface.

Temporary adhesive residues that will eventually be worn from the pavement will be allowed to remain, providing that they are not left in a pattern that will mislead or misdirect motorists. The Engineer will be the sole determiner of misleading temporary marks.

The removal of construction zone pavement markings shall not be required from detours or other areas directed by the Engineer where they do not conflict with permanent markings at the completion of the work. Removal shall be required where it is necessary to transition pavement marking patterns on the detour into permanent markings at the completion of the detour phase.

(F) DAMAGE TO PAVEMENT SURFACES

Any damage to the finished pavement surface, any permanent marks or scars on the finished pavement surface (including remaining pavement marking material), or any adhesive residues left in a pattern that may mislead or misdirect traffic, that results from the removal of pavement markings shall be removed or repaired as directed by and to the satisfaction of the Engineer at no expense to the City. Repairs may include complete removal and replacement of the damaged pavement section if necessary. The Engineer shall be the sole determiner of satisfactory repair.

6.49.4. MEASUREMENT. Temporary pavement markings will be measured in linear feet along the center line of the pavement stripe and shall be based on a four (4") inch wide stripe. Measurement for striping with a plan width greater than the basic four (4") inches, as shown on the Contract Drawings or as directed by the Engineer, will be made by the following method:

$$\frac{\text{Plan Width of Striping (inches) x Linear Feet}}{\text{4 (inches)}}$$

No payment will be made for the number of linear feet of skips in broken or dashed lines.

6.49.5. PRICE TO COVER. The contract price per linear foot of Temporary pavement markings shall include the cost of furnishing all labor, materials, equipment, insurance, and necessary incidentals to apply, maintain and remove temorary pavement markings when so ordered. A separate payment will be made each time temorary pavement markings are first applied on a pavement course in accordance with the contract requirements. No payment will be made for the re-application of Temporary pavement markings, as may be required, during the period of six (6) months from the time of placement.

Payment will be made under:

Item No.	Item	Pay Unit
6.49	TEMPORARY PAVEMENT MARKINGS (4" Wide)	L.F.

SECTION 6.50 - Cleaning of Drainage Structures

6.50.1. DESCRIPTION. Under this section, the Contractor shall clean the basins, drains, inlets and connecting pipes designated, and remove all dirt from site, and do all incidental work, all in accordance with the Contract Drawings, specifications and the directions of the Engineer.

6.50.2. METHODS. All cleaning methods must receive the approval of the Engineer, and final inspection must be made prior to approval for payment.

Prior to construction and as needed at the end of construction, the Contractor shall be required to clean existing drainage structures within the project limits that are specifically designated by the Engineer, in writing, to be cleaned. Payment under this item will be made on a one time basis for each designated drainage structure satisfactorily cleaned prior to construction.

Also during the progress of the work, and until the completion and acceptance there of, all drainage structures, both new and existing, shall be kept thoroughly serviceable throughout the progress of work, and left serviceable at the completion of the contract at no direct payment, in accordance with **Subsection 1.06.28(B)** of the General Conditions and the requirements in the Maintenance of Site item.

6.50.3. MEASUREMENT. The quantity to be measured for payment shall be the number of drainage structures cleaned.

6.50.4. PRICE TO COVER. The contract price bid per each structure cleaned shall cover the cost of all labor, materials, plant, equipment, insurance, and incidentals necessary to clean the basins, drains, inlets and connecting pipes designated, to the satisfaction of the Engineer, and all other incidentals, all in accordance with the Contract Drawings, specifications and the directions of the Engineer.

Payment will be made under:

Item No.	Item	Pay Unit
6.50	CLEANING OF DRAINAGE STRUCTURES	EACH

SECTION 6.51 (VACANT)

SECTION 6.52 - Uniformed Full-Time Flagperson

6.52.1. INTENT. This section describes the employment of full-time uniformed flagpersons to direct and detour traffic.

6.52.2. DESCRIPTION. The Contractor shall furnish full-time uniformed flagpersons to control vehicular and pedestrian traffic as specified in the Contract Drawings and as directed by the Engineer.

6.52.3. METHODS. A flagperson uniform consistent with OSHA standards, shall consist of a reflectorized safety vest for nighttime work and an iridescent safety vest for daytime work, worn over the outer clothing; a regulation hard hat; and a stop/slow paddle signaling device or in emergency situations a reflectorized international orange flag of plasticized cloth 18” square on a 36” shaft. Each flagperson shall be English speaking, properly trained, instructed and experienced in flagperson duties, and required to meet the Engineer’s approval. Each flagperson paid under this item must be a full-time flagperson. If any worker performing services under this item is also assigned the task of directing construction equipment (as per attached Example #2, flagperson “A”) or any laborer tasks, then such worker shall be deemed to be subject to the provisions of Labor Law §220 Prevailing Wage Schedule.

The stop/slow paddle signaling device shall be furnished and operated in accordance with the requirements of the current Official Compilation of Codes, Rules and Regulations of the State of New York, 17 Transportation (B), Part 293, HAND SIGNALING DEVICES.

Automated traffic devices will <u>not</u> be accepted.

6.52A.4. MEASUREMENT. The quantity to be measured for payment shall be the number of person-hours of uniformed flagperson service actually performed, as authorized by the Engineer. Laborers who are not full-time flagperson will not be measured for payment as flagperson under this or any other item. Each uniformed flagperson shall be required to work a minimum of eight hours a day and the Contractor will be given a minimum of 12 hours advanced notice by the Engineer as to when to furnish a flagperson.

6.52A.5. PRICE TO COVER. The contract price per person-hour shall cover the cost of all labor, materials, equipment, and insurance necessary to employ a uniformed full-time flagperson, and equip him/her with safety vests, hard hats, and signaling devices, including all other incidental costs necessary to control and detour traffic, as shown on the Contract Drawings, the attached Examples #1 and #2 (excluding flagperson "A" in Example #2), or as directed by the Engineer.

Payment for flagperson "A" in Example #2, shall be deemed to be included under other items of work, as appropriate.

Where there is no scheduled item for Uniformed Full-Time Flagperson, the cost of furnishing Uniformed Full-Time Flagpersons as required shall be deemed included in the unit price bid for the Maintenance and Protection of Traffic item.

Payment will be made under:

Item No.	Item	Pay Unit
6.52	UNIFORMED FULL-TIME FLAGPERSON	PERSON-HOUR

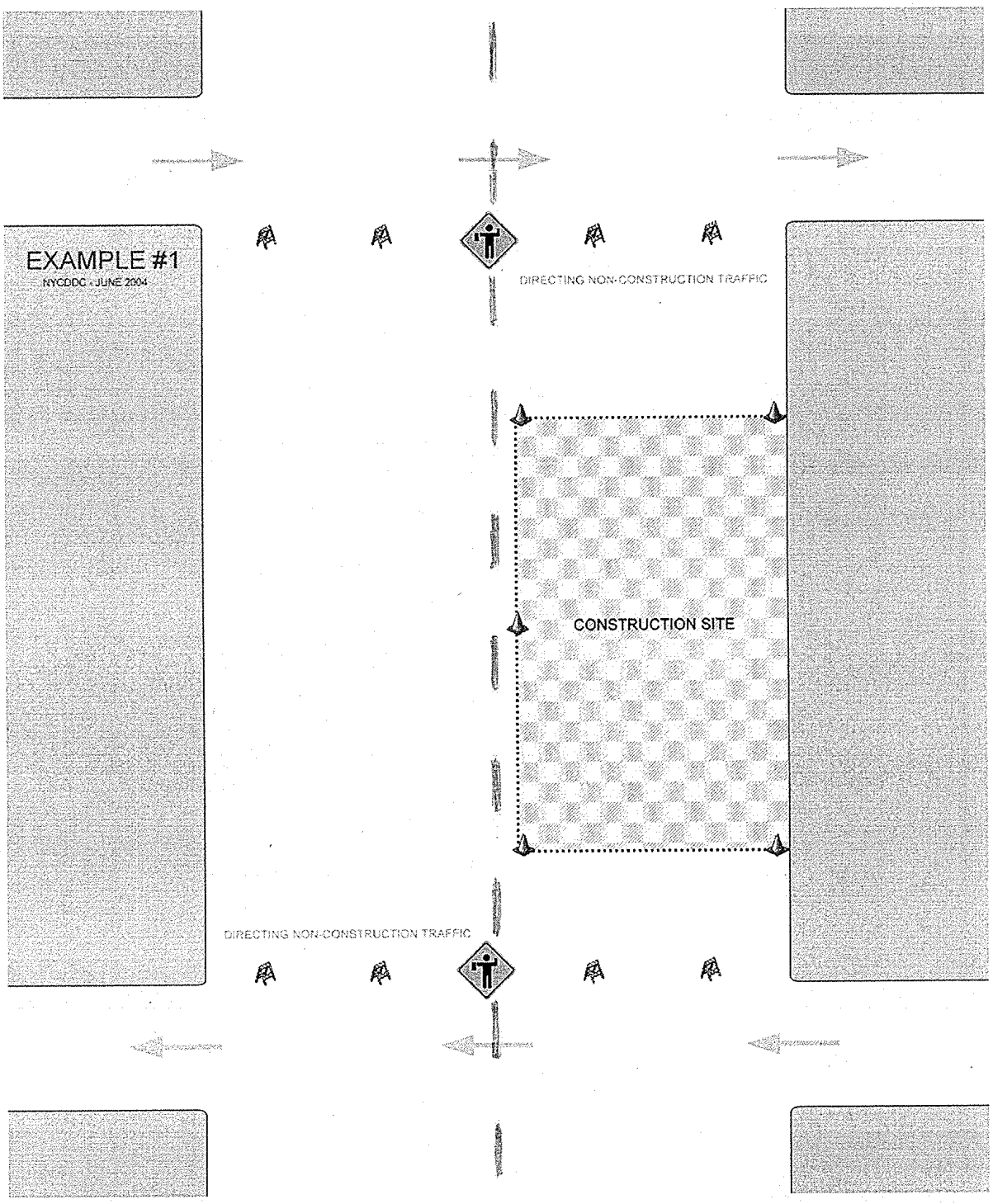
EXAMPLE #1
NYCDDC • JUNE 2004
DIRECTING NON-CONSTRUCTION TRAFFIC
CONSTRUCTION SITE
DIRECTING NON-CONSTRUCTION TRAFFIC

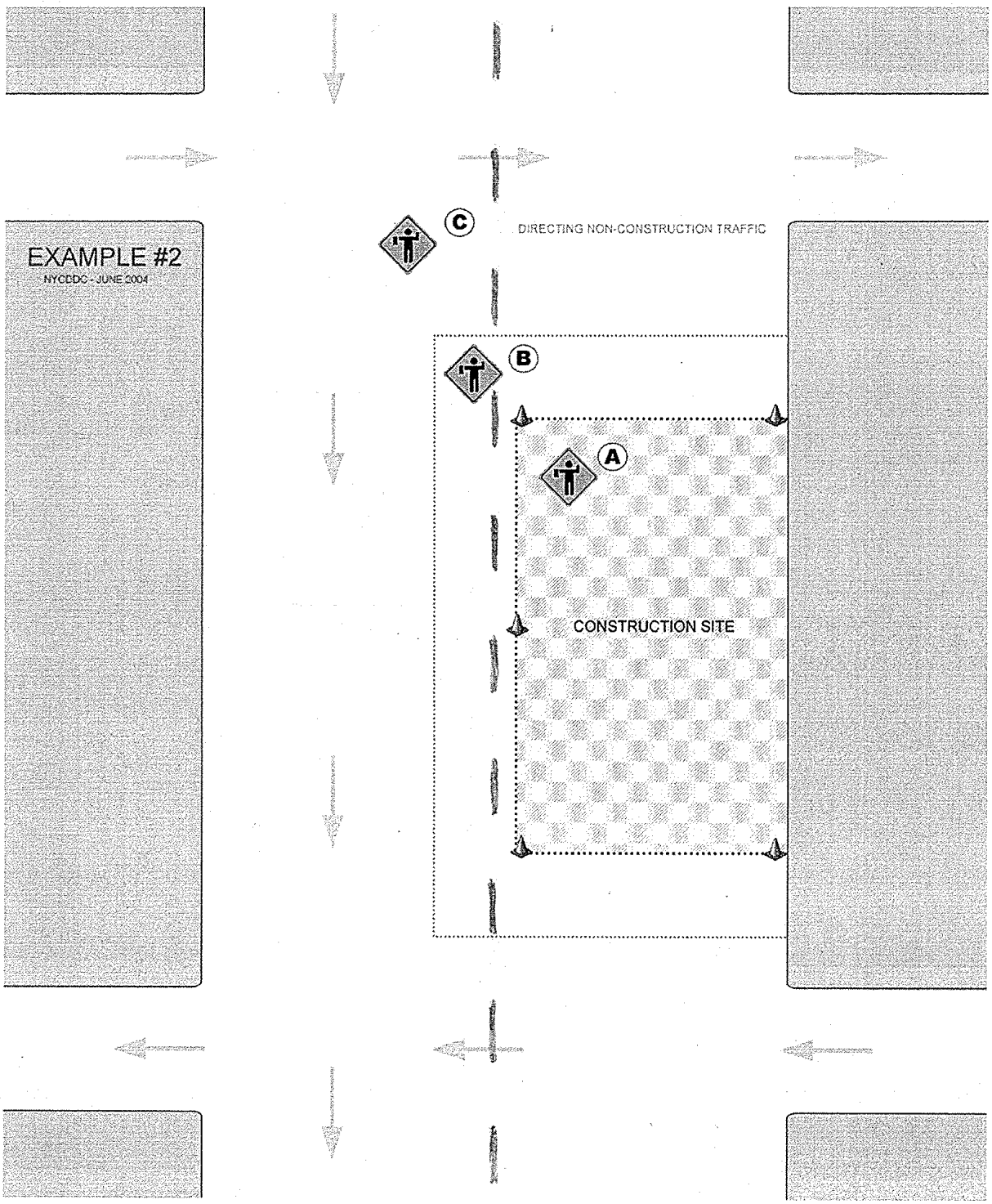
EXAMPLE #2
NYCDDC - JUNE 2004
C
DIRECTING NON-CONSTRUCTION TRAFFIC
B
A
CONSTRUCTION SITE

SECTION 6.53 - Remove Existing Lane Markings

6.53.1. INTENT. This section describes the removal of existing lane markings.

6.53.2. DESCRIPTION. The work shall include the obliterating of designated lane markings on streets, where shown on the Contract Drawings and as directed by the Engineer.

6.53.3. METHODS. The Contractor shall remove, as soon as practicable, existing pavement markings where indicated on the Contract Drawings or where ordered by the Engineer. This shall include any pavement markings that are added during the course of the work. If darkness or inclement weather interferes with removal operations, such operations should be accomplished during the next daylight period or as soon thereafter as weather conditions permit.

The method of removal is subject to the approval of the Engineer. Painting out pavement markings will only be approved for very short term use. Grinding, scraping, sandblasting, etc., must be conducted in such a manner that the finished pavement surface is not damaged or left in a pattern that will mislead or misdirect the motorist.

6.53.4. MEASUREMENT. The quantity to be measured for payment shall be the actual number of linear feet of existing 4" wide lane markings actually removed. Payment for removed markings wider than 4" will be made at the contract price per linear foot of the 4" wide markings removed multiplied by the factor

$$\frac{\text{Actual Width of Marking Removed (Inches)}}{4}$$

6.53.5. PRICE TO COVER. The contract price bid per linear foot shall cover the cost of all labor, plant, materials, equipment, insurance, and incidentals necessary to obliterate designated lane markings, as shown on the Contract Drawings and as directed, and do all incidental work, all in accordance with the Contract Drawings, the specifications and the directions of the Engineer.

Payment will be made under:

Item No.	Item	Pay Unit
6.53	REMOVE EXISTING LANE MARKINGS (4" WIDE)	L.F.

SECTION 6.54 (VACANT)

SECTION 6.55 - Sawcutting Existing Pavement

6.55.1. INTENT. This section describes the full depth sawcutting of the existing pavement at the locations shown on the Contract Drawings, and as and where directed by the Engineer.

6.55.2. METHODS. Where directed, or shown on the Contract Drawings, the Contractor shall sawcut through the full depth of the existing pavement with a straight sawcut edge, and do all work as

shown on the detail drawing. All work must be done in a workmanlike manner, to the satisfaction of the Engineer.

6.55.3. MEASUREMENT. The quantity to be measured for payment shall be the number of linear feet of existing pavement actually full depth sawcut.

No measurement for payment will be made for any partial depth sawcutting of bituminous pavement, the cost of which shall be deemed included in the price bid for this item.

6.55.4. PRICE TO COVER. The contract price per linear foot shall cover the cost of all labor, materials, plant, equipment, insurance, and incidentals necessary to cut existing pavement with sawcuts, do all necessary chiseling, tack coating of edges, etc., and do all other necessary incidental work, all in accordance with the Contract Drawings, the specifications and the directions of the Engineer.

Sawcutting of sidewalk, to allow for curb reconstruction, shall be deemed included in the contract prices bid for curb construction.

Sawcutting of pavement for test pits in pavements designated to be removed under other contract items and to install sewer and water main pipe and/or their facilities shall be deemed included in the contract prices bid for those items, unless otherwise specified.

Payment will be made under:

Item No.	Item	Pay Unit
6.55	SAWCUTTING EXISTING PAVEMENT	L.F.

SECTIONS 6.56 AND 6.57 (VACANT)

SECTION 6.58 - Tack Coat

6.58.1. WORK TO INCLUDE. Under this section, the Contractor shall apply an approved tack coat to areas designated by the Engineer.

6.58.2. MATERIALS. Liquid Asphalt (RC-70), Emulsified Asphalt (RS-1), or Asphalt Cement (AC-20) complying with the requirements of Sections 2.03, 2.04, and 2.05 respectively, shall be furnished and applied.

6.58.3. EQUIPMENT. The Contractor shall provide a distributor for applying tack coat.

The distributor shall be self propelled of an approved type designed, equipped, maintained and operated so that the tack coat can be heated and applied uniformly on variable widths of surface up to 15 feet at readily determined and controlled rates from 0.03 to 2.0 gallons per square yard, with uniform pressure, and with an allowable variation from any specified rate not to exceed 0.02 gallons per square yard. Distributor equipment shall include a tachometer capable of registering the rate of travel in feet per minute, an accurate continuous metering device certified by an approved testing laboratory, and a

certified thermometer for measuring the temperature of tank contents. Distributors shall be equipped with a power unit for the pump, and full circulation spray bars adjustable laterally and vertically.

The distributor may be equipped with an attached bristle broom designed such that it drags on the pavement behind the spray bars. If the broom is used, it shall be adjustable laterally and vertically so that the full width of the applied tack coat is broomed uniformly into the pavement surface.

Distributor shall be equipped with an approved bituminous material sampling valve capable of producing representative samples of all material in the tank.

Hand held power spray units or manual hand spray equipment will not be permitted except where specifically approved by the Engineer and only in areas where the Engineer determines that the use of a self propelled distributor is impractical. Where hand operated units are approved it shall be understood that an approved material metering procedure shall be provided.

6.58.4. METHODS.

(A) SURFACE PREPARATION

Surfaces to be tack coated shall be thoroughly swept and cleaned, as often as required, to remove all dirt, loose and foreign matter, and be free of standing water. Street sweeping equipment shall be a power operated sweeper/broom in combination with a vacuum debris lifter and shall be of a type approved by the Engineer. No tack coat shall be applied unless the surface on which it is to be applied is in a condition acceptable to the Engineer.

All structures such as manhole, basin, valve box, and electrical box frames and covers, joints, and steel faced curbs within areas to be tack coated shall be masked with tar paper, polyethylene film or other approved material. A splash board may be substituted to protect the curb face from being stained with tack coat spray.

(B) TACK COAT APPLICATION

Tack coat shall be uniformly applied by a pressure distributor to a prepared clean pavement. The tack coat shall be applied as approved by the Engineer to offer the least inconvenience to traffic and to prevent pickup or tracking of the bituminous material.

No tack coat shall be applied on a wet or frozen pavement surface. RS-1 shall not be applied when the surface temperature is below 45 degrees F. RC-70 and AC-20 shall not be applied when the surface temperature is below 35 degrees F.

Tack coat material should be heated to the proper temperature so that it is fluid enough to be sprayed from the distributor nozzles. The Contractor shall furnish to the Engineer a temperature-viscosity chart for the material he will be using.

Tack Coat

Material	Spray Temp. (Deg. F.)	Application Rate (Gal./Sq. Yd.)
Liquid Asphalt (RC-70)	120-190	0.03 - 0.08
Emulsified Asphalt (RS-1)	70-140	0.03 - 0.06
Asphalt Cement (AC-20)	275-400	0.04 - 0.06

Within the above specified tack coat application rate, the actual amount used will be dependent upon the existing surface texture. An open texture or milled surface will require more tack coat than a tight surface

or one that is “fat” or flush because of the increased surface area. In general, the correct amount of tack coat sprayed on the surface will leave some of the existing surface still visible through the tack coat.

The application rate shall be 0.03 to 0.07 gallons/yard^2 as approved by the Engineer. Table 6.58-I contains recommended application rates for tack coat on various surfaces:

TABLE 6.58-I
TACK COAT APPLICATION RATES

Surface Type	Application Rate (gallons/yard^2)
New Hot Mix Asphalt	0.03 - 0.04
Milled Surfaces	0.05 - 0.06
Existing Hot Mix Asphalt	0.05 - 0.06
Portland Cement Concrete	0.04 - 0.07
Vertical Surfaces (curbs, concrete drainage structures and appurtenances)	0.06 - 0.07

Application rate of tack coat shall be constantly controlled by the Contractor and monitored by the Engineer in job segments using the tachometer and distributor metering gauges, not by the total quantity of tack coat used averaged over the entire project area applied.

Tack coat shall be uniformly distributed, without atomization, over the areas designated by the Engineer by means of a pressure distributor and in such manner as not to defile or discolor adjacent curbs or other structure surfaces. Approximately 50 gallons of tack coat should be left in the distributor to prevent air from entering the applicator, causing insufficient application in the end area of the spread.

Contractor shall be required to keep on hand an adequate supply of sand or other approved absorbent material at the job site when applying tack coat. Where the application rate of tack coat exceeds that required by more than 0.02 gallons per square yard, as determined by the Engineer, the Contractor shall be required to immediately soak up the excess material with an application of sand or other absorbent material before the tack coat cures. The absorbed tack coat shall then be removed and disposed in an appropriate manner away from the site. No additional payment will be made for this work, including but not limited to removal of sand, additional sweeping, and cleaning.

Prior to paving, the tack coat shall be allowed to cure to a condition where it is tacky to the touch. No greater area shall be treated in any one day than is planned to be covered by asphaltic concrete during the same day, unless otherwise authorized in writing by the Engineer.

All vehicular traffic must be kept off the tack coat at all times. Under unusual circumstances, if traffic must travel over the tack coat before the overlay is placed, a light layer of sand shall be spread on top of the Liquid Asphalt (RC-70) or Emulsified Asphalt (RS-1) tack coats, to prevent the pickup of tack coat material by traffic. Excess sand should be broomed from the pavement surface before the overlay is placed to assure proper bond between the overlay and the existing surface.

All pedestrian traffic shall be blocked from entering areas of newly applied tack coat using suitable traffic control devices and procedures under the appropriately scheduled contract items.

Failure to comply with the above requirements shall result in a shutdown of both the tack coat and paving operations until remedial actions are taken by the Contractor to bring the tack coat application within the permitted tolerance. In addition, any asphaltic concrete wearing course material placed on improperly applied tack coat shall be removed and replaced by the Contractor at no additional cost to the City.

6.58.5. MEASUREMENT. The quantity to be measured for payment shall be the number of square yards of surface actually tack coated.

6.58.6. PRICE TO COVER. The contract price per square yard shall cover the cost of all labor, materials, plant, equipment, insurance, and incidentals necessary to prepare the surfaces, spray tack coat, and do all other incidental work, all in accordance with the Contract Drawings, the specifications, and the directions of the Engineer.

When there is no scheduled item provided therefore, the cost of furnishing and placing Tack Coating shall be deemed included in the prices bid for the various asphaltic concrete wearing course and/or macadam pavement items, as appropriate.

Payment will be made under:

Item No.	Item	Pay Unit
6.58	TACK COAT	S.Y.

SECTION 6.59 - Concrete Barrier

6.59.1. INTENT. This section describes the construction of concrete barriers.

6.59.2. DESCRIPTION. The Contractor shall construct concrete barriers of the types and conforming to the various details shown on the New York State Department of Transportation Standard Sheet for Concrete Barrier.

6.59.3. MATERIALS.

(A) Concrete shall be Class B-32, Type IA, conforming to the requirements of Section 3.05. An approved air-entraining agent shall be added at the time concrete ingredients are mixed with water, to achieve an air content of 7% (5% Min., 9% Max.). Cement shall be White Portland Type I; light colored sand-Type IA; light colored coarse aggregate Type I, Grade B, or Type 2, Size No. 57. Slump shall be 4 inches $\pm$ 1 inch.

(B) Joint filler shall comply with the requirements of Section 2.15, Type IV, Bituminous Fiber.

(C) Joint sealer shall comply with the requirements of Federal Specification TT-S-230, Sealing Compound, Synthetic-Rubber Base, Single Component, Chemically Curing. The color of the compound shall be white.

6.59.4. METHODS.

(A) The Contractor shall pour each type of concrete barrier in monolithic form, in lengths not exceeding 60 linear feet. Transverse joints shall extend through the entire section. Joints shall be filled with premoulded joint filler, placed flush with a recess of 1/2” from the face and top of the barrier, and caulked with joint sealer.

When the ambient temperature falls below 40 degrees F., no pouring of concrete will be permitted.

(B) All forms, including forms for curved sections, shall be made of metal and of such construction that there will be minimum interference to inspection for grade and alignment. Forms shall be braced and secured adequately so that no discernible displacement from alignment or grade will occur during placement of concrete. Where radii are less than 40 feet, forms shall be curved to the design radius.

(C) Concrete Placing and Vibrating: Concrete shall be compacted by means of approved immersion type mechanical vibrators. The vibrator shall be inserted into the concrete at one foot intervals. The vibrator shall be of a size and weight sufficient to thoroughly vibrate the entire concrete mass without damaging or misaligning the forms and reinforcement.

(D) Removal of Forms and Finishing Surfaces: Forms shall be left in place for 24 hours or until, in the judgment of the Engineer, the concrete has sufficiently set so the forms may be removed without injury to the barrier. Immediately after the forms have been removed, surfaces exposed to view shall have all projections and irregularities carefully removed and all cavities neatly filled with mortar of the proportion used in the concrete. The same brand of cement and the same kind of aggregate shall be used for filling cavities as was used in the original concrete mix. Plastering of repaired surfaces will not be allowed. The surface film of all such repaired surfaces shall be carefully removed before setting occurs.

The finished surface of the barrier shall be smooth, dense, unpitted and free from air bubble pockets, depressions and honey combs. If the Engineer deems it necessary, the curb shall be given a wood float finish in order to obtain the above mentioned finish.

(E) Concrete Curing: Curing of concrete barrier shall conform to the requirements specified therefor under **Section 4.06**.

(F) Where the Contractor chooses to precast the concrete barrier, it shall be constructed in accordance with the following requirements:

Precast Concrete Barrier:

1. Fabrication: Precast concrete barrier shall be fabricated to conform to the shapes and sizes shown on the contract Contract Drawings. The length of precast concrete barrier shall be 30 foot maximum. All surfaces exposed after installation shall be cast in steel forms.

   The Contractor shall provide the Engineer with shop drawings and detailed construction procedures of the barrier. The shop drawings shall show the form dimensions and location and type of reinforcement in the precast concrete barrier. The drawings shall be delivered to the Engineer for approval ten (10) working days before fabrication is to begin. No work shall begin until the drawings are approved.

   The tolerance on placement of reinforcing steel in the barrier shall be $\pm$ 1 inch. The chairs, spacers or other devices used to maintain the reinforcement in position shall have rust resistant tips so that no spots will show on the finished faces. The cost of any steel reinforcement required to transport the precast barrier shall be included in the cost of these items.

   Concrete shall be consolidated in the forms by internal vibrators. Exposed surfaces shall be free from objectionable imperfections, such as honeycomb and air voids as determined by the Engineer. If air voids collect at the interface of the concrete and forms, the forms shall be tapped on the outside with rubber mallets or similar devices to displace the entrapped air.

2. Curing: The precast barrier sections may be cured by means of quilted covers which shall be kept wet, or by using polyethylene coated burlap blankets which will not require wetting. Polyethylene coated blankets shall be laid dry with the burlap side against the concrete, and adjoining blankets shall be lapped sufficiently to provide a moisture seal. Retention of moisture for curing by any of the above methods shall be continued for a minimum of 7 days.

   If the precast concrete barrier sections are steam cured, the sections shall be cured in an enclosure free from outside drafts, and cured in a moist atmosphere. The temperature shall be maintained at a temperature between 125 degrees and 160 degrees F. by the injection of steam for a period of not less than 12 hours. Steam curing shall not begin in less than 2 hours from the

time that the last concrete was placed. Care shall be taken by the Contractor to prevent localized "hot spots" caused by the steam lines. A continuous temperature time recorder is required for each enclosure. The temperature of the curing atmosphere for any method shall not be increased or decreased at a greater rate than 40 degrees F. per hour.

3. Repair: Where approved by the Engineer, occasional imperfections in manufacture or those caused by mishandling may be repaired. The repairs shall be properly finished and cured. The color of the repaired area shall match as closely as possible with the rest of the barrier color. The repairs may be made with a mixture of sand and cement. The repairs shall be made to the satisfaction of the Engineer.

4. Sampling and Testing: The concrete in the precast concrete barrier shall be sampled and tested by an approved testing laboratory. Costs for testing and sampling shall be paid by the Contractor.

5. Basis of Acceptance: The precast barrier sections shall be accepted at the job site.

6.59.5. MEASUREMENT. The quantity to be measured for payment shall be the number of linear feet of each type of concrete barrier actually constructed, including transition sections, measured along the centerline of the top surface of each barrier.

6.59.6. PRICES TO COVER. The contract price bid per linear foot for each type of concrete barrier shall cover the cost of all labor, materials, equipment, insurance, and incidentals necessary to complete the work, including forms, joint materials of any type, finishing, curing, and any other work or materials required to satisfactorily complete the work, all in accordance with the Contract Drawings, the specifications and the directions of the Engineer.

Payment will be made under:

Item No.	Item	Pay Unit
6.59 A	CONCRETE BARRIER, TYPE A	L.F.
6.59 B	CONCRETE BARRIER, TYPE B	L.F.
6.59 C	CONCRETE BARRIER, HALF SECTION	L.F.

SECTION 6.59 P - Temporary Concrete Barrier

6.59P.1. INTENT. This section describes the work to be done in connection with temporary concrete barriers.

6.59P.2. DESCRIPTION. The Contractor shall furnish, install, move, maintain and remove lighted temporary concrete barriers. Except as otherwise shown on the Contract Drawings, specified or directed by the Engineer, the material, manufacture, fabrication and installation or erection of temporary concrete barrier shall be in compliance with current New York State Department of Transportation (N.Y.S.-DOT) Standard Sheet No. M619-3R1.

6.59P.3. MATERIALS. Temporary concrete barriers shall conform to the dimensions, joint connection, material details, and anchoring details shown on the N.Y.S.-DOT'S Standard Sheet, except as otherwise shown on the Contract Drawings. The barrier sections shall be precast portable concrete units. The Manufacturer shall certify that the temporary concrete barrier units conform to the details shown on the aforementioned N.Y.S.-DOT'S Standard Sheet or approved drawing.

The Engineer will inspect the temporary concrete barrier sections upon delivery to the project site for conformance to specifications. Any barrier sections having damage and/or defects in the concrete and/or joint connections will be rejected by the Engineer when in his or her judgment the performance of the barriers will be affected.

The temporary concrete barrier sections shall form a smooth and continuous barrier when joined together. Any sections damaged or misaligned while in service shall be corrected or replaced to the satisfaction of the Engineer.

Unless otherwise directed, all barricades shall be striped on the roadway side of the barricade with reflective sheet material in accordance with the Contract Drawings, the National Manual on Uniform Traffic Control Devices for Streets and Highways (National MUTCD) plus the New York State Supplement (NYS Supplement), or as directed by the Engineer. The reflective sheet material shall conform to photometric and color (Orange and White) requirements of **Subsection 730-05.02**, Reflective Sheeting (Class B), of the New York State Department of Transportation (N.Y.S.-DOT), Standard Specifications, Construction and Materials, Office of Engineer.

Where indicated on the Contract Drawings, concrete barricades shall be supplemented by approved low intensity steady burning yellow lights in accordance with the requirements of **Subsection 619.3.03** of the N.Y.S.-DOT Standard Specifications.

6.59P.4. METHODS. The Contractor shall furnish, erect, move, and remove temporary concrete barriers where and as indicated on the Contract Drawings or as directed by the Engineer.

Where indicated on the Contract Drawings or in the proposal, temporary concrete barriers shall be supplemented by approved steady burning lights.

Each run, or bay, of temporary concrete barrier unit shall be fastened together to form a continuous chain. After placement, each successive unit shall be moved longitudinally to remove the slack in the joint between units. The units at each end of a run or bay shall be anchored as shown on the Standard Sheet. Where shown on the Contract Drawings or directed by the Engineer, the ends of the barrier run shall be fitted with a tapered end section, flared back.

6.59P.5. MEASUREMENT. The quantity to be measured for payment shall be the number of linear feet of temporary concrete barrier actually placed including transition sections, measured along the centerline of the top surface of each barrier.

6.59P.6. PRICE TO COVER. The contract price bid per linear foot for each type of concrete barrier shall cover the cost of all labor, materials, equipment, insurance, and incidentals necessary to erect, maintain, and remove the required barrier, including any required connection devices, orange and white reflective stripes on the faces of the barriers, steady burning yellow lights, delineation or guiding devices, all in accordance with the Contract Drawings, the specifications and the directions of the Engineer.

Any movement of temporary concrete barrier, except movements of the concrete barrier necessary to maintain, realign, or replace damaged units will be considered as a movement to a new location and the Contractor will be entitled to payment for the movement.

Payment will be made under:

Item No.	Item	Pay Unit
6.59 P	TEMPORARY CONCRETE BARRIER	L.F.
6.59 PH	TEMPORARY CONCRETE BARRIER, HALF SECTION	L.F.

SECTION 6.60 - Asphalt Block Pavers

6.60.1. WORK TO INCLUDE. Under this section, the Contractor shall furnish and install new asphalt block pavers and relay existing asphalt block pavers. Pavers shall be installed on a three-quarter (3/4") inch thick bituminus setting bed, laid on a three (3") inch foundation course of screenings, unless otherwise shown on the Contract Drawings.

6.60.2. MATERIALS.

(A) NEW ASPHALT BLOCK PAVERS

New Asphalt Block shall be hexagonal and/or rectangular, as shown on the Contract Drawings. New asphalt bocks shall meet the requirements of Section 3.04, unless otherwise specified herein or indicated on the Contract Drawings.

Asphaltic concrete blocks shall be as manufactured by Hanover Architectural Products, Inc. of Hanover, Pa. (1-800-426-4242), or approved equivalent.

Color, size, texture, surface appearance of new asphalt block pavers shall conform with the existing pavers to be relaid. New asphalt block pavers shall have a ground finish, exposing a small amount of aggregate, similar in appearance to Hanover's Matrix #14, unless otherwise noted in the Contract Drawings.

(B) WATER BOUND STONE SCREENINGS BASE

Stone screening shall be either limestone or traprock and shall consist of hard, durable, sharp angled fragments, free from dirt or other deleterious, matter, graded within the following limits:

100% passing 1/2" square opening screen
20% to 40% passing 20 mesh sieve
5% to 15% passing 200 mesh sieve

Material substitutions will not be approved under any circumstances. All recycled materials will be rejected.

(C) BITUMINOUS SETTING BED

Asphalt cement to be used in the bituminous setting bed shall conform to ASTM Designation D 946 with a Penetration Grade of 85 - 100..

The fine aggregate to be used in the bituminous setting bed shall be clean, hard sand with durable particles and free from adherent coatings, lumps of clay, alkali salts, and organic matter. It shall be uniformly graded from "coarse" to "fine" and all passing the No. 4 sieve and meet the gradation requirements when tested in accordance with the standard method of test for sieve or screen analysis of fine and coarse aggregates ASTM Designation C 136.

The dried fine aggregate shall be combined with hot asphalt cement, and the mix shall be heated to approximately 300 degrees Fahrenheit at an asphalt plant. The approximate proportion of materials shall be seven and one-half (7-1/2%) percent cement asphalt, eighty-seven and one-quarter (87-1/4%) percent sand, and five and one-quarter (5-1/4%) percent mineral filler. Each ton shall be apportioned by weight in the approximate ratio of 150 lbs. asphalt to 1,745 lbs. sand and 105 lbs. mineral filler. The Contractor shall determine the exact proportions to produce the best possible mixture for construction of the bituminous setting bed to meet construction requirements.

(D) NEOPRENE-MODIFIED ASPHALT ADHESIVE

Neoprene-Modified Asphalt Adhesive shall consist of two (2) percent neoprene (Grade WM 1) oxidized asphalt with a 155 degree softening point (80 penetration).

(E) JOINT FILLER

Joint Filler shall be clean, hard sand with durable particles free from adherent coatings, lumps of clay, alkali salts, and organic matter.

6.60.3. METHODS. Prior to Commencement of Work, the Contractor shall submit the name of the block manufacturer(s) and installer he proposes to use and upon which his bid is based, along with their respective work history experience, and at least one sample of each different block which he will use in the project. The manufacturer and installer shall have a minimum of five (5) years of documented experience in block paver work.

UNDER NO CIRCUMSTANCE SHALL ANY EXISTING ASPHALT PAVERS BE EXCAVATED OR REMOVED WITHOUT WRITTEN PERMISSION AND DIRECTION BY THE ENGINEER AS TO WHICH PAVERS ARE TO BE RESET IN THE NEW WORK.

Existing pavers designated to be removed and reset shall be carefully removed, cleaned of all adherent material, and stored for resetting by the Contractor.

(A) PREPARATION OF SURFACE

The Contractor shall trim subgrade to smooth uniform lines to the satisfaction of the Engineer. The subgrade shall be compacted with equipment that will yield the following density:

Cohesive Subgrade – Minimum of 95% of AASHTO T180 Method density.
Cohesion less Subgrade – Minimum of 100% of AASHTO T180 Method D density.

The Contractor shall remove from the subgrade all debris, foreign and other undesirable material which interferes with satisfactory construction. The fine grade shall not be muddy or otherwise unsatisfactory when the base course material is placed upon it. If the fine grade becomes rutted or displaced, due to any cause whatsoever, the Contractor shall regrade same without additional payment. The Contractor shall trim subgrade to smooth uniform lines to the satisfaction of the Engineer.

(B) SPREADING OF STONE SCREENINGS

The spreading of stone screenings shall be done from suitable spreading equipment or from piles dumped along the edge of the proposed pavement. Screening shall be evenly spread so that the foundation course will have, after rolling, the required thickness of three (3”) inches, unless otherwise shown on the Contract Drawings. No segregation of large or fine materials will be allowed, but the screening as spread shall be well graded with no pockets of fine material.

(C) ROLLING OF STONE SCREENINGS

After the screenings have been properly spread, they shall be thoroughly compacted by rolling with an approved roller weighing not less than ten (10) tons except in tree pit area. The stone screenings shall be sprinkled and saturated immediately before being rolled, the sprinkler being followed by the roller. If the material becomes wet to such an extent that the pavement becomes unstable and waves under the roller, the roller shall be taken off and this portion left to dry out before it is resumed.

More screenings shall be added where necessary, and the sprinkling and rolling shall continue until the foundation has been properly compacted. If necessary to secure satisfactory results in the opinion of the Engineer, the foundation shall be sprinkled and backrolled on succeeding days. The Contractor shall maintain and repair the foundation courses until the blocks have been placed.

(D) PLACING BITUMINOUS SETTING BED

The bituminous setting bed cushion shall be placed to proper elevation and grade by the use of depth control bars (3/4" thickness) placed directly over the stone screenings. If grades must be adjusted, set wood chocks under depth control bars to proper grade. Set two bars parallel to each other approximately eleven (11') feet apart to serve as guides for striking board (12' long 2" x 6" board). The depth control bars must be set carefully to bring the pavers, where laid, to proper grade.

Place some bituminous bed between the parallel depth control bars. Pull this bed with the striking board over these bars several times. After each passage, low porous spots must be showered with fresh bituminous material to produce a smooth, firm and even setting bed. As soon as this initial panel is completed, advance the first bar to the next position in readiness for striking the next panel. Carefully fill up any depressions that remain after removing the depth control bars and wood chocks.

The bed shall be spread in a continuous workmanlike manner. Installation of base in spotted, different and isolated areas will not be accepted. Bed depth greater than one and one-eighth (1-1/8") inch will not be acceptable. The Contractor shall remove and replace base course required to maintain specified bed thickness. Minimum base course replacement repair thickness shall be two (2") inches.

After the bed has cooled, it shall be rolled by hand with a one hundred (100 lb.) pound roller to eliminate sponginess and to prepare the surface for the installation of the tack coat. The setting bed shall be protected against all pedestrian traffic and construction equipment to insure a level surface for setting pavers.

In tree pit areas after trees have been planted and topsoil placed, a layer of stone screenings shall be placed and tamped.

The Sand Cushion around tree pits shall consist of clean, hard durable uncoated stone particles free from lumps of clay and all deleterious substances and shall be so graded when dry, one hundred per cent shall pass a one-quarter (1/4") inch square opening sieve: not more than thirty-five (35) percent by weight shall pass a No. 50 sieve. Sand Cushion may be rejected if it contains more than ten per cent by weight of loam and silt.

(E) NEOPRENE-MODIFIED ASPHALT ADHESIVE

The neoprene-modified asphalt adhesive tack coat shall be applied by mopping, squeegeeing or troweling over the top of the setting bed so as to provide a bond between the bituminous setting bed and the paver.

(F) LAYING ASPHALT BLOCK PAVERS

When the modified asphalt adhesive is dry to the touch, carefully place the pavers by hand, ground finish side up unless otherwise specified, in straight courses, with hand tight joints and uniform top surfaces, keeping full alignment according to the patters shown on the Contract Drawings. Block shall be laid on the bed before it has set. The blocks shall be carefully laid with the best face up, in straight courses at right angles to the line of the street or at such other angles as may be directed. Joints shall be hand tight and read from zero (0) to one-eighth (1/8") inch maximum.

All blocks shall be clean when placed in the pavement. Blocks which in the opinion of the Engineer are not satisfactorily clean shall be washed before placing.

Pavers may vary slightly in shade and tonality. Where four or more pallets of pavers are required to be laid in the project, the installer shall work from at least four (4) pallets at a time in order to create a uniform blend of paver shades.

All blocks shall be clean when placed in the pavement. Blocks which in the opinion of the Engineer are not satisfactorily clean shall be washed before placing. Cutting of blocks shall be clean, straight and

smooth and performed in strict accordance with the manufacturer's recommendations. All cut block that is chipped, cracked or otherwise flawed shall be discarded as directed by the Engineer at no additional cost to the City.

In no case shall the bituminous setting bed in front of the pavement be disturbed or walked on during the laying of the blocks.

After a sufficient number of blocks have been laid, all broken or misshapen blocks shall be marked by the Engineer and removed and replaced by the Contractor at no additional cost to the City.

When all objectionable blocks have been removed from the pavement and all replacements made, the pavement shall be swept clean and shall be tested with straightedge laid parallel with the center line and any depression exceeding one-quarter (1/4") inch shall be corrected and brought to proper grade. All blocks disturbed in making replacements or correcting depressions shall be settled into place by ramming, and the filler shall then be applied.

Each section of pavement must be acceptable to the Engineer before the application of filler.

In no case shall the setting bed in front of the pavement be disturbed or walked on during the laying of blocks.

Cutting of blocks shall be clean, straight, and smooth and performed in strict accordance with the manufacturer's recommendations. All cut blocks that are chipped, cracked, or otherwise flawed shall be discarded and replaced, as directed by the Engineer, at no additional cost to the City.

Existing asphalt block pavers may be rejected by the Engineer for re-use because of excessive roundness or other objectionable characteristics.

Any shortage in block to be relaid due to the Contractor's negligence as determined by the Engineer shall be supplied and incorporated in the work by the Contractor at his own expense.

After a sufficient number of blocks have been laid, all broken or misshapen blocks shall be marked by the Engineer and removed and replaced by the Contractor.

When all objectionable blocks have been removed from the pavement and all replacements made, the pavement shall be swept clean and shall be tested with an approved straight-edge ten (10') feet long or with an approved surface testing machine laid parallel with the center line and any depression exceeding one-quarter (1/4") inch shall be corrected and brought to proper grade. All blocks disturbed in making replacements or correcting depressions shall be settled into place by ramming, and the filler shall then be applied.

Each section of pavement must be acceptable to the Engineer before the application of filler.

(G) JOINT FILLER

Upon the completion of the work of laying the blocks in each section to the satisfaction of the Engineer, the surface of the blocks shall be swept clean, and the joints filled with dry sand.

All joints shall be filled the same day as the blocks are laid. In no case shall a wearing course be left overnight or when work is stopped without the joint filling being completed. Filler shall not be applied if the blocks are wet or if the air conditions are such that the filler does not readily enter the joints.

Filler shall be well worked into the joints by means of squeegees or other approved devices operating slowly backward and forward. Squeegeeing shall continue until the joints are full, flush with the top surface.. Immediately after the joints are filled, the pavement shall be swept clean, fog lightly with water and clean of all stains.

(H) SUFFICIENCY OF APPARATUS

The apparatus for agitating the filler shall be sufficient in numbers and efficiency to permit the filler gang to closely follow the pavers or rammers, as the case may be.

(I) TRIAL INSTALLATION

The Contractor shall install approximately 400 sq. ft. area of pavers in a location to be determined by the Engineer for the purpose of establishing a standard of comparison for the remaining work. Said area shall include a typical corner quadrant with pedestrian ramp areas. The Engineer shall inspect and approve the trial area for overall appearance and joint spacing before proceeding with the remainder of the work.

(J) TRAFFIC

No traffic of any kind will be allowed on the wearing course until permitted by the Engineer.

Newly laid pavers must be protected at all times by panels of plywood on which the installer stands. These panels can be advanced as work progresses. However, the plywood protection must be kept in areas which will be subjected to continued movement of materials and equipment. These precautions must be taken in order to avoid depressions and protect paver alignment.

(K) DEFECTIVE WEARING COURSE

Such portions of the completed wearing courses as are defective in finish, compression, composition, or that do not comply with the requirements of these specifications, shall be taken up, removed and replaced with suitable materials, properly laid in accordance with these specifications at the Contractor's own expense.

6.60.4. SUBMITTALS.

Prior to ordering pavers, the Contractor shall submit four (4) samples of each type of paver they propose to use for approval by the Engineer. The samples shall be clearly labeled with the Contract No., manufacturer, and finish. All pavers used in the work shall conform to the approved samples. A three (3) pound bag of stone screenings shall be submitted to the Engineer for approval, with a sieve analysis and the name of the supplier attached.

6.60.5. MEASUREMENT.

(A) ASPHALT BLOCK PAVERS RELAID

The quantity to be measured for payment shall be the number of square yards of asphalt block pavers relaid on the site, measured in place, to the satisfaction of the Engineer.

(B) FURNISH AND INSTALL ASPHALT BLOCK PAVERS

The quantity to be measured for payment shall be the number of square yards of new asphalt block pavers installed on the site, measured in place, to the satisfaction of the Engineer.

6.60.6. PRICES TO COVER.

(A) ASPHALT BLOCK PAVERS RELAID

The contract price bid shall be a unit price per square yard and shall cover the cost of all labor, materials, plant, equipment, insurance, and necessary incidentals required to remove, clean, store, and relay existing asphalt block pavers on the site, including but not limited to stone screenings, bituminous setting

bed, neoprene-modified adhesive and sand, in accordance with the Contract Drawings, the specifications, and the directions of the Engineer.

(B) FURNISH AND INSTALL ASPHALT BLOCK PAVERS

The contract price bid shall be a unit price per square yard and shall cover the cost of all labor, materials, plant, equipment, insurance, and necessary incidentals required to furnish, deliver and install new asphalt block pavers in place on the site, including but not limited to stone screenings, bituminous setting bed, neoprene-modified adhesive, asphalt block pavers and sand, all in accordance with the Contract Drawings, the specifications, and directions of the Engineer.

Payment will be made under:

Item No.	Item	Pay Unit
6.60 A	ASPHALT BLOCK PAVERS RELAID	S.Y.
6.60 B	FURNISH AND INSTALL ASPHALT BLOCK PAVERS	S.Y.

SECTIONS 6.61 THRU 6.65 (VACANT)

SECTION 6.66 - Brick Pavers

6.66.1. WORK TO INCLUDE. Under this section the Contractor shall furnish and install brick pavers in the appropriate design pattern(s), shades and color as shown on the Contract Drawings.

6.66.2. MATERIALS.

(A) BRICK PAVERS

Brick pavers shall be of the sizes, color and patterns as shown on the Contract Drawings and shall comply with the requirements of ASTM Designation C 902, “Pedestrian and Light Traffic Paving Brick”, Class SX, Type I Application PX, except that they shall be fired to produce a dense paver with an absorption of less than 6% (in a 24-hour cold water absorption test), a Modulus of Rupture of at least 2,000 psi, and a compressive strength of not less than 8,000 lbs. per square inch. The brick pavers must be capable of withstanding at least the equivalent of 50 cycles of freeze-thaw conditions, with no visible deterioration, have a straight wire-cut finish, be dimensionally stable, and all colors shall be as approved by the Design Engineer. Circular wire cut pavers will not be allowed. The Contractor shall provide certification from an approved testing laboratory attesting to the brick’s compliance with the aforementioned water absorption, compressive strength, Modulus of Rupture, and freeze-thaw requirements as defined under ASTM Designation C 67.

Prior to Commencement of Work, the Contractor shall submit the name of the brick manufacturer and installer he proposes to use and upon which his bid is based, along with their respective work history experience, and at least one sample of each different brick which he will use in the project. The manufacturer and installer shall have a minimum of five (5) years of documented experience in brick paver work. Roadway and sidewalk pavers shall be a standard product of a single manufacturer.

Brick pavers shall be produced by any of the manufactures shown on the Contract Drawings or an approved equivalent.

(B) BITUMINOUS SETTING BED

Asphalt cement to be used in the bituminous setting bed shall conform to ASTM Designation D 946 with a penetration at 77 degrees F, 100 G., 5 Sec. of minimum 85 millimeters and maximum of 100 millimeters.

The fine aggregate to be used in the bituminous setting bed shall be clean, hard sand with durable particles and free from adherent coatings lumps of clay, alkali salts, and organic matter. It shall be uniformly graded from "coarse" to "fine" and all passing the No. 4 sieve and meet the gradation requirements when tested in accordance with the standard method of test for sieve or screen analysis of fine and coarse aggregates ASTM Designation C 136.

The dried fine aggregate shall be combined with hot asphalt cement, and the mix shall be heated to approximately 300 degrees F. at an asphalt plant. The approximate proportion of materials shall be seven and one-half (7-1/2) percent cement asphalt, eighty-seven and one-quarter (87-1/4) percent sand, and five and one-quarter (5-1/4) percent mineral filler. Each ton shall be apportioned by weight in the approximate ratio of 150 lbs. asphalt to 1,745 lbs. sand and 105 lbs. mineral filler. The Contractor shall determine the exact proportions to produce the best possible mixture for construction of the bituminous setting bed to meet construction requirements.

(C) NEOPRENE-MODIFIED ASPHALT ADHESIVE

Neoprene-Modified Asphalt Adhesive shall consist of two (2) percent neoprene (Grade WM 1) oxidized asphalt with a 155 degree softening point (80 penetration).

(D) JOINT FILLER

Joint Filler shall meet the applicable requirements of **Section 3.06** Type 2, and shall be pigmented with brick dust to match the color of the brick pavers.

(E) CUT BACK ASPHALT

The Contractor shall use an approved cut back asphalt placed on the concrete base for roadway pavers prior to setting of bituminous setting bed.

6.66.3. METHODS.

(A) PLACING BITUMINOUS SETTING BED

The concrete base, which shall be furnished and installed under another contract item, shall be sufficiently cured prior to installation of the bituminous setting bed as approved by the Engineer. To install the setting bed over the surface of the base, place 3/4 inch deep control bars directly over the base. If grades must be adjusted, set wood chocks under depth control bars to proper grade. Set two bars parallel to each other approximately eleven (11') feet apart to serve as guides for striking board (12' long 2" x 6" board). The depth control bars must be set carefully to bring the pavers, where laid, to proper grade.

Place some bituminous bed between the parallel depth control bars. Pull this bed with the striking board over these bars several times. After each passage, low porous spots must be showered with fresh bituminous material to produce a smooth, firm and even setting bed. As soon as this initial panel is completed, advance the first bar to the next position in readiness for striking the next panel. Carefully fill up any depressions that remain after removing the depth control bars and wood chocks.

The setting bed shall be rolled with an approved hand roller after the bed has cooled to eliminate a spongelike surface.

A coating of two (2) percent neoprene modified asphalt adhesive shall be applied by mopping or squeegeeing or troweling over the top surface of the bituminous setting bed so as to provide a bond

under the pavers. If it is troweled, the trowel shall be serrated with serrations not to exceed one-sixteenth (1/16) of an inch. Minimum adhesive thickness shall be 1/16 inch.

Bed shall be spread in a continuous workmanlike manner. Installation of base in spotted, different and isolated areas will not be accepted. Bed depth greater than 1-1/8" will not be acceptable. Contractor shall remove concrete required to maintain specified bed thickness. Minimum concrete replacement repair thickness shall be 2".

(B) INSTALLATION OF BRICK PAVERS

All brick pavers shall be laid in the pattern shown on the Contract Drawings or as directed by the Engineer to provide a uniformly even surface. No brick pavers shall be laid or grouted in freezing weather.

Prior to installation of brick pavers, all steel plates required to be installed adjacent to tree pits as shown on the plan shall have been installed and painted with a shop coat of epoxy primer, an epoxy intermediate coat and a polyurethane topcoat in accordance with the requirement specified under **Subsection 2.13.4.**, for the painting of steel facing for concrete curb.

When the modified asphalt adhesive is dry to the touch, carefully place the pavers, best side up, by hand in straight courses with hand tight joints and uniform top surface. Good alignment must be kept, and the pattern(s) shall be that shown on the Contract Drawings. All straight patterns shall be straight and all curved patterns shall be smooth curved. Pavers shall be set flush with a top surface elevation tolerance of 1/16" between adjacent pavers but not more than $\pm$1/32" at perimeters between pavers and adjacent curb or sidewalk surfaces. Where bricks are to be cut, only machine full depth diamond saw-cut bricks will be accepted in the work. Brick pavers in corner quadrant or curvilinear patterns shall be cut on a radial. Brick pavers for meter posts shall be cored through as directed by the Engineer. Brick shall not be cut to less than one (1") inch in the least dimension. Areas with dimensions less than 1" shall be wet grouted.

One half inch weep holes at bituminous base shall be provided through curb joints and/or concrete base as shown on the Contract Drawings.

Newly laid pavers must be protected at all times by panels of plywood on which the installer stands. These panels can be advanced as work progresses. However, the plywood protection must be kept in areas which will be subjected to continued movement of materials and equipment. These precautions must be taken in order to avoid depressions and protect paver alignment.

(C) JOINT TREATMENT

Hand tight joints shall read from 0" to maximum 1/8". Sweep a dry mixture of joint filler until joints are completely filled. Fog lightly with water. Brick pavers shall be cleaned of excess grout and joints finished prior to the grout setting up. All brick paving shall be kept moist for 4 days after filling the joints with grout. Cement stains that remain after the 4 day curing period shall be cleaned with a 10% solution of muriatic acid or mortar cleaner, or sweep with moist sand, followed by flushing clean with water. Care shall be taken to avoid the use of acid in areas where runoff could damage trees or other vegetation.

(D) BRICK DELIVERY & TEST STRIPS

Pavers shall be suitably packaged, delivered and unloaded at the site to minimize breakage and chipping of bricks. Bricks shall be delivered to site prior to installation of concrete base and adjacent sidewalk. Sample test width strip shall be laid out prior to pouring of concrete base and adjacent sidewalk to conform to exact number and unit width of selected pavers. Test strip shall be minimum 3 brick courses from curb to concrete sidewalk and as directed by the Engineer. Test strip locations shall be as shown on the Contract Drawings and as directed by the Engineer.

(E) TRIAL INSTALLATION

The Contractor shall construct approximately 400 sq. ft. area of brick pavers in a location to be determined by the Engineer, for the purpose of establishing a standard of comparison for the remaining work. Said area shall include a typical corner quadrant with pedestrian ramp areas. The Engineer shall inspect and approve the trial area for color, overall appearance and joint spacing before proceeding with the remainder of the work.

6.66.4. SAMPLES. A sample of the brick paver(s) of the color, range and dimensions shown on the Contract Drawings shall be furnished to the Engineer for his written approval prior to delivery and installation, and after approval shall be used as a Standard for all pavers incorporated into the work. Samples shall be approved for surface texture, color variations, dimensional stability, color contrast (where more than one brick or pattern is indicated) and shall generally be equal to sample(s) on display for the project, and written approval will be required prior to installation.

6.66.5. TRAFFIC CONTROL. The Contractor shall provide suitable traffic and pedestrian control during the paver installation until all work is completed. Traffic of other trades, while installation is in progress, will not be approved and damaged work shall be removed and replaced as directed by the Engineer, at the Contractor's own expense.

6.66.6. MEASUREMENT.

(A) FURNISH BRICK PAVERS

The quantity to be measured for payment shall be the number of square feet of brick for brick pavement delivered to the site, measured in place. This area shall be equal to the area of installed brick pavers.

(B) INSTALL BRICK PAVERS

The quantity to be measured for payment shall be the number of square feet of brick pavers actually installed on site, measured in place, to the satisfaction of the Engineer.

(C) FURNISH AND INSTALL BRICK PAVERS FOR PARKING METERS

The quantity to be measured for payment shall be the actual number of square feet of brick pavers installed for parking meters on site, measured in place, to the satisfaction of the Engineer.

6.66.7. PRICES TO COVER.

(A) FURNISH BRICK PAVERS

The contract price bid shall be a unit price per square foot and shall cover the cost of all labor, materials, plant, equipment, and incidentals necessary to furnish and deliver brick pavers to the work site, including the cost of all samples and testing required for certification of the brick pavers.

(B) INSTALL BRICK PAVERS

The contract price bid shall be a unit price per square foot and shall cover the cost of all labor, materials, plant, equipment, insurance, and incidentals necessary to install brick pavers, including the cost of furnishing and installing the bituminous setting bed, neoprene modified asphalt adhesive, and joint filler, installing weep holes, all cleaning, cutting, and other incidental work, all in accordance with the Contract Drawings, the specifications, and the directions of the Engineer.

(C) FURNISH AND INSTALL BRICK PAVERS FOR PARKING METERS.

The contract price bid shall be a unit price per square foot and shall cover the cost of all labor, materials, plant, equipment, insurance, and incidentals necessary to furnish, deliver and install brick pavers for parking meters, all in accordance with the Contract Drawings, the specifications, and the direction of the Engineer.

Payment will be made under:

Item No.	Item	Pay Unit
6.66 AA	FURNISH BRICK PAVERS (4"X 8" X 2-1/4")	S.F.
6.66 AB	INSTALL BRICK PAVERS (4"X 8" X 2-1/4")	S.F.
6.66 BA	FURNISH AND INSTALL BRICK PAVERS (FOR PARKING METERS)	S.F.
6.66 DA	FURNISH BRICK PAVERS (4"X 4" X 2-1/4")	S.F.
6.66 DB	INSTALL BRICK PAVERS (4"X 4" X 2-1/4")	S.F.

SECTION 6.67 - Subbase Course, Select Granular Material

6.67.1. INTENT. This section describes the work to be done in connection with the construction of a subbase course, of the thickness specified.

6.67.2. DESCRIPTION. Under this section, the Contractor shall furnish, place and compact a subbase course of granular material in conformity with the lines, grades, thickness and typical sections indicated on the Contract Drawings, or as determined by field conditions and ordered in writing by the Engineer.

Unless otherwise specified, the Contractor shall, at his option, furnish and place material conforming to any of the following types: Material A, Material B, Material C, Material D, or Material E (Milled Asphaltic Concrete Aggregate). However, only one material shall be used on a project, unless the Contractor has received written permission from the Engineer to use more than one material, and Milled Asphalt Concrete Aggregate may not be used less than three (3) feet above the highest seasonal high groundwater table.

6.67.3. MATERIALS. All granular material acceptable under this section shall be sound, hard, durable stone, gravel, glass, blast furnace slag, mechanically crushed recycled concrete (broken asphalt will not be accepted), or milled asphalt concrete aggregate. It shall be well graded from coarse to fine and may contain not more than thirty (30) percent by weight of glass. Material tests and quality control methods pertaining to the work of this section will be performed in conformance with the procedures contained in the appropriate New York State Department of Transportation publications in effect on the advertisement date of this project. These publications are available upon request to the N.Y.S. Department of Transportation Regional Director or the Director, Geotechnical. Of the particles retained on the one-quarter (1/4") inch square sieve, not more than thirty (30%) percent by weight, shall consist of flat or elongated pieces. A flat or elongated piece is defined herein as one where the greatest dimension of which is more than three times the least dimension. Aggregate gradation shall be tested in accordance with ASTM C 33. The Plasticity Index shall be tested in accordance with ASTM D 4318.

The above material requirements shall apply along with the additional requirements below.

Should, at any time during work and for any reason, the material fail to conform to the specified quality and gradation requirements of the type chosen by the Contractor, he shall by the addition of selected acceptable material and/or satisfactory manipulation produce a material meeting the requirements, below.

Deleterious material shall be defined as any material that does not consist of concrete, asphalt, glass, brick, stone, sand, gravel or blast furnace slag, when these materials are used in the subbase in conformance with the specifications requirements, or any material which in the opinion of the Engineer may adversely affect the performance of this product durning handling, during construction, or in its final application.

Recycled Portland cement concrete material may be used for Material A and Material D, below.

MATERIAL A

All of this material shall consist solely of Recycled Portland Cement Concrete Aggregate (RPCCA) the product of mechanical crushing or at least 95 percent of the material by weight shall be mechanical crushed RPCCA mixed with Stone or Sand Gravel, and be free from organic and other deleterious material. This material may contain up to 5% by weight asphalt and/or brick.

The quality of Material A shall be determined by the Magnesium Sulphate Soundness Test. The maximum percent loss, by weight, after 4 cycles shall be 20.

This material shall conform to the following gradation:

Passing Sieve	Percent by Weight
2”	100
1/4”	30-45
No. 100	5-40
No. 200	0-10

The Plasticity Index of the material passing the 40 mesh sieve shall not exceed 5.0.

MATERIAL B

All of this material shall consist solely of Stone which is the product of mechanical crushed ledge rock.

The quality of Material B particles shall be determined by the Magnesium Sulphate Soundness Test. The maximum percent loss after 4 cycles, by weight, shall be 20.

This material shall conform to the following gradation:

Passing Sieve	Percent by Weight
1/2”	100
1/4”	70-100
No. 10	40-75
No. 40	15-40
No. 200	5-15

The Plasticicty Index of the material passing the 40 mesh sieze shall not exceed 5.0.

MATERIAL C

This material shall consist of a granular soil or a mixture of granular soil and crushed stone.

The quality of Material C particles shall be determined by the Magnesium Sulphate Soundness Test. The maximum percent loss after 4 cycles, by weight, shall be 20.

This material shall conform to the following gradation:

Passing Sieve	Percent by Weight
2”	100
1”	80-100
1/4”	50-85
No. 10	30-70
No. 40	15-40
No. 200	6-12

The Plasticity Index of this material passing the 40 mesh sieve shall not exceed 5.0.

MATERIAL D

All of this material shall consist solely of Recycled Portland Cement Concrete Aggregate (RPCCA) the product of mechanical crushing or at least 95 percent of the material by weight shall be mechanical crushed RPCCA mixed with Stone or Sand Gravel, and be free from organic and other deleterious material. This material may contain up to 5% by weight asphalt and/or brick.

The quality of Material D shall be determined by the Magnesium Sulphate Soundness Test. The maximum percent loss, by weight, after 4 cycles shall be 20.

This material shall conform to the following gradation:

Passing Sieve	Percent by Weight
1”	100
3/4”	65-90
3/8”	45-75
1/4”	30-55
No. 100	4-15

The Plasticity Index of the material passing the 40 mesh sieve shall not exceed 5.0.

MATERIAL E
MILLED ASPHALTIC CONCRETE AGGREGATE

All of this material shall consist of asphaltic concrete millings to be furnished by the Contractor. Areas to be milled shall be cleared of all debris, soil and vegetation, and power broomed to remove fine particles prior to milling to prevent contaminating the milled material. Milling equipment shall be operated in such a manner as to produce milled material which passes a two (2”) inch sieve. The presence of any added material to each truck load of millings will be cause for rejection of the entire truck load. No soundness or Plasticity Index testing will be required for this alternate. Field compaction of millings should be conductied using moisture contents from 3% to 7%.

6.67.4. METHODS.

(A) STRIPPING THE SOURCE. The source of material shall be stripped of all sod, topsoil, overburden and other objectionable material before the excavation operations for the material are started, and shall be kept stripped at a minimum thirty (30') feet from the top of the working face of the source at all times.

(B) STOCKPILING AND SAMPLING. All material shall be stockpiled, unless otherwise directed. Stockpile construction requirements, sampling, testing and acceptance/rejection procedures shall be as stipulated in the appropriate New York State Department of Transportation publication in affect at the time of advertisement.

After excavation from the source, and processing and blending, if necessary, the material shall be stockpiled. Stockpiles shall be located at a distance of not less than fifty (50') feet from the outside bottom edge of the conical stockpile built up under the processing plant conveyor, or not less than 50 feet from the toe of the working face of the source. Unless otherwise approved, in writing, these stockpiles shall be formed in layers having a maximum thickness of two (2') feet and to a height not exceeding twelve (12') feet, and shall contain not less than one thousand (1,000) cubic yards or the amount needed for the job, whichever is smaller. Removal of material from stockpiles for placement on the grade shall be by side excavation along nearly vertical faces for the full depth of stockpile. The use of a clam shell type bucket for loading the removal trucks or the use of pan type scrapers for moving the stockpile material to its final position as subbase course will not be permitted. No material shall be added to a stockpile after the stockpile has been sampled for approval. Only material from approved stockpiles shall be placed on the grade for this section. The presence of any oversize particles in the stockpile will be cause for rejection of the entire stockpile. No material shall be removed for use from any stockpile until the stockpile has been sampled, tested, and approved in writing, by the Engineer, for placement on the grade. It shall be the duty of the Contractor to furnish suitable and approved excavating equipment for such sampling. Approval of a stockpile for placement on the grade shall not relieve, in any degree, the full responsibility of the Contractor to furnish, in its compacted position, a subbase course of select granular materials, the final condition of which conforms to all the requirements of the specifications for this section. In the event the Contractor shall have a plant or procedure resulting in subbase course material of uniform quality, at a rate satisfactory to the Engineer, and such that satisfactory samples for tests can be obtained, the requirement for stockpiling may be waived. Prior approval of the Engineer must be obtained and the work must be done in accordance with such conditions as may be imposed in the approval. Such waiver shall remain in force only so long as a satisfactory material is produced.

The stockpiling of the milled asphaltic concrete aggregate is not required.

(C) PLACING. Prior to placing the subbase course, the finished subgrade surface shall not extend above the design elevation at any location and filter fabric material shall be furnished and installed under Item No. 6.68, on the prepared subgrade surface.

Do not place materials blended with glass in contact with geotextile filter fabric. Ensure that glass incorporated into subbase is thoroughly mixed so that glass constitutes not more that thirty (30%) percent by weight anywhere in the subbase.

The spreading of any layer of subbase material shall be done with spreader equipment approved by the Engineer and shall be spread to such thickness that the maximum depth of the layer, after compaction, will be six (6") inches, unless otherwise specified in the Contract Documents. The minimum loose lift thickness is 1.5 times the maximum particle size. Spreading from piles dumped on the roadway will not be permitted. No segregation of large or fine particles will be allowed. The material, as spread, shall be well graded with no pockets of fine material. Water shall be added in such amounts as the Engineer may consider necessary to obtain satisfactory compaction.

When the moisture content of the layer is within the limits for proper compaction, the entire surface shall be rolled with a pneumatic tired roller, having an operating weight of between one thousand (1,000) and

two thousand five hundred (2,500) pounds per tire, or smooth steel wheel roller having a minimum weight of ten (10) tons. Each portion of the layer shall be covered by a minimum of eight (8) passes of the roller.

For heavier, vibratory or more efficient types of approved compaction equipment, the minimum number of passes required on all portions of each layer shall be determined by the Engineer after appropriate field tests to evaluate the efficiency of such equipment. In limited areas, where the use of a roller is impractical, approved vibrating plate compactors or impact rammers shall be used to compact the material.

After compaction, the top surface of this course shall not extend above nor more than one-quarter (1/4") inch below true grade and surface at any location. The subbase course, at any location, shall be compacted, finished and completed to the above tolerance and approved by the Engineer, before any forms for concrete pavement or succeeding pavment course is placed at that location. Any depressions or holes that develop during rolling shall be filled with the material used for the subbase course and re-rolled.

In all cases, the subbase course must be so thoroughly compacted that it will not weave under the roller.

The width of the layer of subbase course shall be restricted to that required for placement of the lane being paved and shall not be laid in excess of five hundred (500) linear feet without being compacted. No traffic or hauling, other than that necessary for bringing material for the next course, shall be permitted over this course. Should the subgrade, subbase, or any other material become churned up into or mixed with this subbase course for any reason whatsoever, the Contractor shall at his own expense remove such mixtures and replace it with material acceptable for this item.

The Contractor shall assume full responsibility for any contamination and/or degradation of any part of this course during construction and shall, at his own expense, remove any and all portions of this course which do not conform to the requirements of these specifications and replace those portions with acceptable material.

6.67.5. TRAFFIC AND CONTAMINATION. No highway or construction equipment traffic shall be permitted over the final finished subbase course surface except as necessary for the construction of the overlying course at that location. Prior to final finishing of the course, however, traffic over the course may be permitted at locations designated by and under such restrictions as may be imposed by the Engineer. In locations where permission is given to route construction equipment over the subbase course, the Contractor shall place the course to not less than two (2) inches above the design subbase course grade, to form a temporary protective layer. After traffic in these locations has been terminated, the protective layer shall be removed and the surface of the course fine-graded to the proper grade.

Contamination of the subbase course with any deleterious material, such as silt, clay, mud or organic material, through any cause whatsoever, shall be corrected by the Contractor by excavation and replacement of the subbase material in the affected areas.

6.67.6. FINE GRADE TOLERANCE. The final surface of the subbase course shall be fine graded so that, after final compaction and just prior to placement of base or pavement courses, the surface elevation shall not vary above nor more than one-quarter (1/4") inch below the design line and grade at any location. The surface shall be completed to the above tolerance and approved by the Engineer prior to any work at a given location to place an overlying course. If, after approval, the subbase course becomes displaced or disturbed in any way for any reason, the Contractor shall repair and regrade the damage to the satisfaction of the Engineer prior to placing the overlying course.

6.67.7. MEASUREMENT. The quantity of subbase course to be measured for payment shall be the number of cubic yards of subbase course material, of the type specified, placed in the final compacted position computed from payment lines indicated on the Contract Drawings or, where changes have been ordered, from payment lines established by the Engineer.

No deductions shall be made for the volumes occupied by manholes, catch basins and other such objects.

6.67.8. PRICE TO COVER. The unit price bid per cubic yard shall include the cost of furnishing all labor, plant, material, equipment, and insurance necessary to satisfactorily complete the work. The cost of adding water as may be required shall also be included in the price bid. No direct payment will be made for losses of material which may result from compaction, foundation settlement, erosion or any other cause; the cost of such losses shall be deemed included in the price bid for this item.

Progress payments will be made after the subbase course has been properly placed and compacted. Payment will be made at the unit price bid for seventy-five (75%) percent of the quantity. The balance of the quantity will be paid for after the final finishing to the required tolerance and just prior to the placing of the next course.

No separate payment will be made for furnishing, placing, removing and disposing of protective layers where traffic is permitted, for fine grading to specified tolerances, corrective work, or losses of material.

Payment will be made under:

Item No.	Item	Pay Unit
6.67	SUBBASE COURSE, SELECT GRANULAR MATERIAL	C.Y.

SECTION 6.67MAC - Subbase Course, Milled Asphaltic Concrete Aggregate

6.67MAC.1. INTENT. This section describes the work to be done in connection with the construction of a subbase course, of the thickness specified.

6.67MAC.2. DESCRIPTION. Under this section, the Contractor shall construct a subbase course, of the thickness specified, consisting of milled asphaltic concrete aggregate. Milled asphaltic concrete aggregate will be furnished to the Contractor at a designated City yard. The Contractor shall be required to pick-up, transport, place and compact asphaltic concrete aggregate millings to form a subbase course in conformity with the lines, grades, thickness and typical sections indicated on the Contract Drawings, or as determined by field conditions and ordered in writing by the Engineer.

6.67MAC.3. MATERIALS.

Asphaltic concrete aggregate millings for the subbase course shall be furnished by the City to the Contractor at a designated City yard.

6.67MAC.4. CONSTRUCTION METHODS.

(A) PICKING UP AND DELIVERING

The Contractor shall be required to pick-up asphaltic concrete millings at the Department's Flatlands Avenue Yard, located at 6080 Flatlands Ave., Brooklyn, N.Y., weekday between the hours of 8:00 A.M. and 3:00 P.M. At least seven (7) days prior to requiring millings, and also the day before each arranged pickup date, the Contractor shall be required to call the Flatlands Yard's Supervisor at (718) 251-8774 to arrange for the City's personnel to be available at the yard to load the Contractor's trucks.

Millings will be loaded on to Contractor's trucks, by the Yard's personnel, for delivery by the Contractor to the site. No material shall be added to the millings supplied by the City. Only millings from the City's yard

shall be placed on the subgrade under this Section. The presence of any added material by the Contractor will be cause for rejection of the entire truck load. The Contractor agrees and warrants that each truck load of such asphaltic concrete aggregate milling picked up from the designated City's yard has originated only from that City yard and has not been mixed with material from any other site.

Protection of the vehicles used by the Contractor is the sole responsibility of the Contractor and the cost of repairs or towing is deemed to be the Contractor's responsibility. The New York City Departments of Transportation and their Representatives or employees, shall be held harmless for any damages incurred to the Contractor's vehicles while on City property.

(B) PLACING

Prior to placing the subbase course, the finished sub-grade surface shall not extend above the design elevation at any location. The spreading of subbase course material shall be done with spreader equipment approved by the Engineer. Each subbase course shall be constructed in layers not to exceed four (4") inches in thickness after compaction. Spreading from piles dumped on the roadway will not be permitted. No segregation of large or fine particles will be allowed, but the material, as spread, shall be well graded, with no pockets of fine material. Water shall be added in such amounts as the Engineer may consider necessary to obtain satisfactory compaction.

When the moisture content of the course is within the limits for proper compaction, the entire surface shall be rolled with a pneumatic tired roller, having an operating weight of between 1,000 and 2,500 pounds per tire, or a smooth steel wheel roller, having a minimum weight of ten (10) tons. Each portion of the course shall be covered by a minimum of eight (8) passes of the roller.

For heavier, vibratory or more efficient types of approved compaction equipment, the minimum number of passes required on all portions of each course shall be determined by the Engineer. In limited areas, where the use of a roller is impractical, approved vibrating plate compactors or impact rammers shall be used to compact the material.

6.67MAC.5. TRAFFIC AND CONTAMINATION. No highway or construction equipment traffic shall be permitted over the final finished subbase course surface except as necessary for the construction of the overlying course at that location. Prior to final finishing of the course, however, traffic over the course may be permitted at locations designated by and under such restrictions as may be imposed by the Engineer. In locations where permission is given to route construction equipment over the subbase course, the Contractor shall place the course to not less than 2 inches above the design subbase course grade, to form a temporary protective layer. After traffic in these locations has been terminated, the protective layer shall be removed and the surface of the course fine-graded to the proper grade.

Contamination of the subbase course with any deleterious material, such as silt, clay, mud or organic material, through any cause whatsoever, shall be corrected by the Contractor by excavation and replacement of the subbase material in the affected areas.

6.67MAC.6. FINE GRADE TOLERANCE. The final surface of the subbase course shall be fine graded so that, after final compaction and just prior to placement of base or pavement courses, the surface elevation shall not vary more than one-quarter (1/4") inch above or below the design line and grade at any location. The surface shall be completed to the above tolerance and approved by the Engineer prior to any work at a given location to place an overlying course. If after approval, the course becomes displaced or disturbed in any way for any reason, the Contractor shall repair and regrade the damage to the satisfaction of the Engineer prior to placing the overlying course.

6.67MAC.7. MEASUREMENT. The quantity of subbase course to be measured for payment will be the number of cubic yards of milled asphaltic concrete aggregate subbase course material placed in the final compacted position computed from payment lines indicated on the Contract Drawings, or, where changes have been ordered, from payment lines established by the Engineer.

6.67MAC.8. PRICE TO COVER. The contract unit price bid per cubic yard shall cover the cost of furnishing all materials, labor, equipment, insurance, and incidentals required to satisfactorily complete the work. No separate payment will be made for furnishing, placing, removing, and disposing of protective layers where traffic is permitted, for fine grading to specified tolerances, corrective work, or losses of material.

Payment will be made under:

Item No.	Item	Pay Unit
6.67 MAC	SUBBASE COURSE, MILLED ASPHALTIC CONCRETE AGGREGATE	C.Y.

SECTION 6.68 - Plastic Filter Fabric

6.68.1. WORK TO INCLUDE. Under this section, the Contractor shall furnish and install plastic filter fabric in the manner shown on the Contract Drawings. The purpose of the plastic filter fabric is to provide a permeable layer which allows water but not soil particles to pass through. The plastic filter fabric shall be installed in accordance with the Contract Drawings, the specifications and the directions of the Engineer.

6.68.2. MATERIALS. The filter fabric shall be composed of a strong polymer type fiber, resistant to both rot and insects, and formed into a non-woven fabric with the following minimum requirements:

Grab Tensile Strength, ASTM D 4632	180 lbs.
Trapezoid Tear Strength, ASTM D 4533	50 lbs.
Puncture Strength (5/16”), ASTM D 3787 modified (with 5/16” dia. flat tip with 1/32” x 45° chamfer)	75 lbs.

The fabric shall be free of any treatment which might significantly alter its physical properties. During all periods of shipment and storage, the fabric shall be wrapped in a heavy-duty protective covering to protect it from direct sunlight, mud, dirt, dust and other debris.

The manufacturer shall submit certified test data to cover each shipment of material.

6.68.3. CONSTRUCTION DETAILS. Plastic filter fabrics which are subject to deterioration by ultraviolet rays shall be protected from sunlight during transport and storage. For those fabrics which are subject to damage from sunlight, the information on the packaging material shall warn against exposing the filter fabric to sunlight.

The filter fabric shall be spread on a prepared surface as called for on the Contract Drawings or as directed by the Engineer. The fabric shall be laid loosely, so that placement of overlaying materials will not stretch or tear it. Stone placement shall be done in a manner that will not prove injurious to the fabric. Should the fabric become torn or otherwise damaged by any cause, it shall be patched by placing an additional section of plastic filter fabric over the tear with a three-foot overlap on all sides.

The overlaying material shall be placed within a period of two (2) weeks whether the fabric is subject to damage from sunlight or not. Fabric shall be anchored in an approved manner that will hold it in position. Adjacent sheets shall be overlapped by at least thirty-six (36”) inches. No traffic or Contractor’s equipment will be permitted to travel directly on the plastic filter fabric.

Should the roadway be done one-half at a time, the Contractor shall excavate three (3') feet further on the first half to allow for 36-inch overlap at the center of pavement. This overlap shall be rolled and covered over with temporary fill to protect fabric from sunlight and the cost of this temporary fill shall be included in the price bid for the plastic filter fabric.

Filter fabric installed in sidewalk and curb areas shall be placed transverse to the street so as to avoid overlapping at critical points (such as under curb, etc.). The Engineer will determine the method of placement.

The Contractor is required to maintain the integrity of the filter fabric around new catch basins by draping lengths of filter fabric over basin excavation that will provide enough slack so that overlap does not occur in the basin cavity or on the slope but rather at the subgrade level. Slack should allow for load dispersal or stone aggregate about the catch basin.

6.68.4. MEASUREMENT. The quantity of Plastic Filter Fabric to be measured for payment shall be the number of square yards computed between the limits shown on the Contract Drawings or within the limits established in writing by the Engineer prior to performing the work. No quantity will be included for material used for repair of tears or for material used to provide the overlaps.

6.68.5. PRICE TO INCLUDE. The unit price bid per square yard for this item shall include the cost of furnishing all labor, materials, plant, equipment, insurance, samples, and incidentals necessary to complete the work including the cost of preparing the surface upon which the plastic filter fabric is placed, all in accordance with the Contract Drawings, the specifications and the directions of the Engineer.

Payment will be made under:

Item No.	Item	Pay Unit
6.68	PLASTIC FILTER FABRIC	S.Y.

SECTION 6.69 (VACANT)

SECTION 6.70 - Maintenance and Protection of Traffic

6.70.1. DESCRIPTION. Under this section the Contractor shall be required to complete the work of maintaining and protecting all pedestrian and vehicular traffic within the limits of the contract. This shall include, but not be limited to furnishing, placing, relocating and removing, when directed, all necessary temporary warning and regulatory signs and temporary traffic control devices to re-route and protect traffic - all in accordance with an approved Maintenance and Protection of Traffic (MPT) Plan, the Contract Drawings, the specifications and directions of the Engineer.

Prior to performing any work in the Contract, if there are no MPT plans provided in the contract documents or the Contractor is proposing a change to the contract MPT plan, the Contractor shall prepare and submit an MPT Plan for the work required under this Contract. The MPT Plan shall be prepared by a New York State Licensed Professional Engineer who is a qualified and experienced in Traffic Engineering and Work Site Safety. The MPT Plan shall include all necessary and required legal precautions for the protection of traffic and for the safety of the public, and shall be subject to approval by the New York City Department of Transportation's Office of Construction Mitigation and Coordination (OCMC) and the Engineer.

The provisions of this section are supplementary to and do not abrogate the General Conditions (**Section 1.06**), the General Notes on the Contract Drawings relating to maintenance and protection of traffic or the OCMC Traffic Stipulations. Furthermore, any conditions pertaining to the maintenance and protection of traffic during the life of the contract which are addressed in the General Conditions and in the General Notes on the Contract Drawings, whether or not addressed under this Section, shall be deemed as having been addressed under this Section.

6.70.2. GENERAL. The Contractor shall adhere to the following requirements and to any additional maintenance of traffic requirements that are included in the Contract Drawings. If there are any discrepancies between the following requirements and the requirements shown on the Contract Drawings, then the Contract Drawings shall take precedence.

(A) The Contractor shall observe the laws and ordinances of the City in relation to obstructing the streets, keeping open passageways, and protecting the same where they are exposed and would be dangerous to the public travel.

(B) The Contractor shall provide for a clear demarcation between the work area and the remainder of the right-of-way that is open to traffic. This includes sidewalk areas open to pedestrians on streets that are permitted to be closed except to Local and Emergency Traffic. However, under no circumstances shall the Contractor discriminate against an individual with a disability, as defined in the Americans with Disabilities Act, in providing services, programs or activities pursuant to this Contract.

(C) Unless otherwise shown on the Contract Drawings or approved by the Engineer, the Maintenance and Protection of Traffic (MPT) Plan shall conform to the Specifications set forth in the National Manual on Uniform Traffic Control Devices for Streets and Highways (National MUTCD) plus the New York State Supplement (NYS Supplement), and shall also conform with the directions of the OCMC and the Engineer.

(D) Access for local and emergency vehicular traffic shall be provided at all times in construction work areas. The Contractor shall move and restore barrels, barricades and other traffic control devices as ordered by the Engineer for local and emergency access at no additional compensation.

(E) Throughout the course of the work, the health and welfare of people shall be provided for. The Contractor shall, at least one (1) week prior to start of work, ascertain the specific needs of individuals whose homes or place of business may require special consideration for access while required construction work is in progress. In all such cases, the Contractor shall make all arrangements with health, safety and protective agencies to ensure that any and all emergency or incidental needs of seriously ill and/or handicapped people will be cared for. One (1) week advance notification of construction shall be given to affected residents.

The Contractor shall maintain traffic at all times at all highway ramps, hospital emergency entrances, subway stations, schools (and for school busses), fire houses, police precincts and major institutions within the project locations as directed by the Engineer. Suitable ingress and egress shall be provided at all times for all abutting properties, residences and businesses. The Contractor shall, where required, provide travel lanes and pedestrian passageways. Travel lanes and pedestrian passageways shall be drained and kept reasonably smooth, safe and in suitable condition at all times and shall cause a minimum interference to traffic consistent with the proper prosecution of the work. Unless otherwise specified or stipulated by the OCMC, construction work on streets which must be completely closed to traffic shall be performed during the normal work week (Monday thru Friday).

(F) Where the Contractor is specifically ordered to perform night work between the hours of 6:00 P.M. and 6:00 A.M. or to work on weekends, the Contractor will, in addition to the non-conformance clause included herein, be subject to liquidated damages of the amount specified in Schedule “A” for each and every hour, or any part thereof, that the entire width of roadway and sidewalk are not available to traffic after 7:00 A.M. the morning following this night or weekend work operations. The Contractor shall

be required to clear the sidewalk of all his materials, equipment, etc., for the entire width of roadway and sidewalk to be available for traffic, except for excavated or freshly poured concrete sidewalk.

(G) All excavated material shall be loaded directly into dump trucks. No debris shall be allowed to accumulate.

(H) The Contractor is placed on notice that the maintenance and protection of traffic during construction is considered as important as is the actual construction.

(I) Pursuant to Article 7 of the Standard Construction Contract and the requirements stipulated hereinabove, the Contractor shall provide personnel to patrol the work site, as necessary, to ensure that conditions on the site are adequate for public safety and convenience at all times.

6.70.3. MAINTENANCE AND PROTECTION OF TRAFFIC PLANS.

(A) The Contractor shall notify the Mayor's Traffic and Construction Coordinating Council (OCMC), in writing, at least twenty (20) days prior to the start of construction in order that preconstruction meetings can be scheduled to finalize measures needed to control traffic flow. The notice must include the Contract Number, Name of Contract and OCMC File Number. The Contractor shall prepare and submit Preliminary Maintenance and Protection of Traffic (MPT) Plans a minimum of fourteen (14) days prior to the OCMC's preconstruction meeting for review by the OCMC and the Department's Assistant Commissioner for Construction. The Preliminary MPT Plans shall outline the Contractor's proposed staging, sequence and schedule of construction operations; and proposed traffic lanes configuration, traffic routing and detours. All stipulations provided by the OCMC shall be in writing.

(B) The Contractor is advised that other contractors may be working in the general area during the term of this project. In such cases, the Contractor may be required to modify and coordinate the MPT Plans with that of any other contractor who may be operating within the contract limits or adjacent areas as directed by the Engineer.

(C) When MPT Plans have not been provided to the Contractor as part of the Contract Documents or if the Contractor proposes to modify the provided MPT Plans, he shall be required to prepare and furnish, to the Engineer, MPT Plans that have been approved by the OCMC. The MPT Plans submitted to the Engineer shall be subject to further review and approval by the Department's Assistant Commissioner for Construction. The MPT Plans shall include, but not be limited to, the following:

(1) Proposed stages, sequence and schedule of construction operations;
(2) Maximum size and extent of Contractors work area for each stage of construction;
(3) Proposed signage, application and removal of pavement markings, methods and devices for traffic lane(s) delineation and channelization, placement and maintenance of devices, lighting, traffic regulations, and surveillance and inspection. All drawings are to be drawn to scale as applicable to the various street systems. The use of not to scale schematic MPT drawings shall be subject to approval by the Engineer;
(4) Size, depth and location of construction (trench and excavation) as it relates to street usage;
(5) Width of roadways, traffic lanes and sidewalks;
(6) Existing and proposed direction of traffic, proposed traffic routing and detours;
(7) Land use - i.e. commercial, residential, schools, churches, hospitals, etc.;
(8) Bus routes, truck routes, temporary bus stop relocations;
(9) Existing street furniture - i.e., meters, traffic signals, lampposts, etc.;
(10) Traffic regulations - i.e., curbside (No Parking Anytime, etc.); regulatory (Stop Sign, etc.);
(11) All relevant existing street and traffic conditions and proposed conditions.

As the project advances, the Contractor shall update and/or submit new MPT Plans for review and approval by the OCMC and the Department's Assistant Commissioner for Construction.

6.70.4. TRAFFIC ROUTING AND DETOURS.

(A) Where the MPT Plans, the Specifications and/or the directions of the Engineer call for the closing of a street (curb to curb), the Contractor shall obtain a "Street Closure Permit" from the OCMC.

(B) The Contractor shall contact the OCMC, local Police Precinct, Fire Department, Community Board, Borough President's Office - Chief Engineer, and Emergency Medical Services, (also New York City Transit Authority, Metropolitan Transportation Authority, and Long Island Railroad when applicable) forty eight (48) hours prior to the implementation of any roadway closure or the setting up of any detour.

(C) Where directed by the Engineer, the Contractor shall have the detour roadway stabilized and paved prior to setting up any detour. Detour route(s) developed as a requirement for the Maintenance and Protection of Traffic must be maintained throughout the duration of the detour. Maintenance by the Contractor shall include, but not be limited to, repairs of potholes or depressions, and the installation, maintenance and removal of all the necessary pavement markings, detour signs, and regulatory and/or no parking signs required for the detour. The Contractor shall be required to restore all original signs and pavement markings when the detour is no longer required, as directed by the Engineer. All such work shall be done in accordance with these Standard Highway Specifications.

6.70.5. TRAFFIC CONTROLS. The Contractor shall maintain and protect all existing traffic control devices, traffic and street name signs and sign posts, etc., throughout the project area. Where existing traffic control devices of any type are disturbed, whether by the construction operation or by the Contractor's negligence, the Contractor shall restore or replace same, as soon as possible, to the satisfaction of the Engineer and at no additional cost to the City, unless otherwise provided for in this Contract. Should a traffic signal or street light be damaged, the Contractor shall immediately contact the New York City Department of Transportation, Division of Traffic Operations, Signals Engineering and Street Lighting, to report the damage.

The Contractor shall provide, place, and maintain all temporary traffic control devices, barricades, lights, plastic cones, flags, flashers, barrels, flashing arrow boards, variable message boards, safety orange construction fence, pedestrian steel barricades, construction signs, flagpersons and warning signals in accordance with the National MUTCD plus the NYS Supplement; unless otherwise shown on the Contract Drawings; required in the specifications and/or ordered by the Engineer. The use of unauthorized or unapproved signs, barricades, lights, barrels, flags and other temporary traffic control devices will not be permitted. Any damaged or defective temporary traffic control devices must be immediately removed and replaced.

Notwithstanding the provisions contained herein, it remains the Contractor's responsibility to provide for and implement minor additional measures that are necessary to maintain the safety of vehicular traffic and pedestrians during construction. The provision and use of supplies such as traffic cones, high visibility ribbons and flags where needed or directed by the Engineer shall be considered as minor and incidental items.

(A) SIGNS:

(1) The Contractor shall develop an inventory of traffic signs along the construction route by taking an adequate number of preconstruction photographs.

(2) The Contractor shall install temporary signs, as per the requirements of **Section 6.25**, prior to the start of each phase of construction and shall cover each temporary sign to the satisfaction of the Engineer until the start of construction. The exact location, size, wording and details of sign panels and mountings shall be subject to approval by the Engineer.

(3) The Contractor may be directed by the Engineer to install additional construction signs and markings where it is deemed necessary for proper maintenance and protection of traffic.

(4) The Contractor shall keep all signs in proper position, clean and legible at all times. Care shall be taken to ensure that weeds, shrubbery, soil, and construction materials and equipment are not allowed to obscure any sign, light, warning signal or other traffic control device.

(5) The backside of all temporary signs to be furnished under this contract shall be clearly labeled with the Contractor's Company Logo, the Agency's name (NYCDDC) and the Contract Number, with lettering from 1-1/2 to 2 inches in height, and at a location where this information will not be obstructed by sign supports, as approved by the Engineer. A sample of each type of proposed signs must be submitted to the Engineer for his approval, prior to any signs being posted.

(6) The Contractor shall provide, install and maintain all regulatory construction signs, as required. These regulatory signs shall conform to the standards and specifications of the New York City Department of Transportation Bureau of Traffic.

(7) Unless otherwise approved by the Engineer, the Contractor shall remove all temporary advanced warning signs and temporary traffic control devices that pertain to a specific roadway, immediately after construction has been completed on that roadway, and/or from the detour routes or locations where advisory signs may have been required.

(8) The Contractor is advised that the New York City Department of Transportation has special standards for regulatory and "No Parking Construction" signs and that the details of these new signs and information concerning the option of purchasing them from the NYC Department of Transportation can be obtained through the OCMC Borough Coordinator.

(B) BARRICADES AND BARRIERS: To permit adequate visibility at intersections, all barricades shall be placed so as not to hinder pedestrian or vehicular sight lines. Similarly, no sheeting shall extend more than twenty-four (24") inches above the existing pavement grade within forty (40') feet of an intersection.

(1) TEMPORARY PEDESTRIAN STEEL BARRICADES:

Temporary Pedestrian Steel Barricades shall be furnished, installed, maintained, and removed in accordance with the requirements of **Section 7.36**.

Temporary pedestrian steel barricades are to be used to delineate work areas from pedestrian areas, within the sidewalk area as specified or directed by the Engineer.

(2) TYPE III BREAKAWAY BARRICADES:

Type III Breakaway Barricades shall be furnished, installed, maintained, and removed in accordance with the requirements of **Section 6.28B** and, unless otherwise approved by the Engineer, are to be used on Federally Funded Projects only. A Federally Funded Projects shall be identified by the words "Fed.. Aid Project No." located on the front cover of the Contract book.

(3) LIGHTED TIMBER BARRICADES:

Lighted Timber Barricades shall be furnished, installed, maintained, and removed in accordance with the requirements of **Section 6.28A**.

(4) TEMPORARY CONCRETE BARRIERS:

Temporary Concrete Barriers shall be furnished, installed, maintained, and removed in accordance with the requirements of **Section 6.59 P**.

(C) BARRELS: Plastic Barrels, including flashers where required, shall be furnished, installed and maintained in accordance with the requirements of **Section 6.87**.

(D) PAVEMENT MARKINGS: The Contractor shall obliterate or remove, by scarification, all permanent lane markings and install all temporary lane markings, as shown on the MPT plans unless otherwise directed by the Engineer. The Contractor shall remove all temporary lane markings and reinstall permanent lane markings within forty-eight (48) hours of permanent pavement restoration. All permanent markings shall be thermoplastic reflectorized (unless directed otherwise by OCMC), regardless of the conditions and type of markings prior to construction. Thermoplastic Reflectorized Pavement Markings shall meet the requirements of **Section 6.44**.

(E) TIMBER CURBS: Timber Curb shall be in accordance with **Section 6.26**.

(F) BRIDGING AND STEEL PLATES: Bridging and/or steel plates shall be provided over all excavations in front of driveways and excavations over which pedestrian or vehicular traffic is to be maintained. Plates shall be of a thickness sufficient for the loads to be carried and shall have not less than two (2') feet of bearing on either side of an excavation. Width of bridging or plates for vehicular traffic shall not be less than ten (10') feet, and for pedestrian traffic not less than four (4') feet. Bridging or plates for pedestrian traffic shall be equipped with approved dismountable handrails on both sides, for the full length of bridging or plates. The Contractor shall be responsible for the adequacy of all bridging and/or plates.

The Contractor shall provide and maintain bridging and/or steel roadway plates over any and all excavations not backfilled and restored at the end of the work period. Open excavations, within street limits, shall not be permitted at the close of each work period excepting sewer trenches and trenches for water mains that are 20 inches in diameter or larger, where approved by the Engineer. Bridging and/or steel plates shall be provided as directed by the Engineer.

(G) UNIFORMED FLAGPERSONS: Uniformed Flagpersons shall be furnished in accordance with the requirements of **Section 6.52**.

(H) FLASHING ARROW BOARDS: Flashing Arrow Boards with or without impact attenuators, as may be required, shall be furnished, installed, maintained, and removed in accordance with the requirements of **Section 9.99**.

(I) VARIABLE MESSAGE BOARDS: Variable Message Boards, as may be required, shall be furnished, installed, maintained, and removed in accordance with the requirements of **Section 8.08**.

6.70.6. PROVISIONS FOR VEHICULAR TRAFFIC.

(A) Unless otherwise shown on the Contract Drawings or specified herein, the minimum level of demarcation between the work area and a lane open to vehicular traffic shall be by the use of Plastic Barrels. Plastic barrel spacing for demarcating work areas shall not exceed ten (10') feet on centers.

(B) Plastic barrels may be used for cut-and-cover operations (e.g., laying distribution water mains) or for other operations where the work area is in the same location for less than two (2) days (e.g., curb/sidewalk work).

(C) Where trenches will not be backfilled and temporarily restored with asphaltic concrete or binder mixture, or plated at the end of the work day, timber curb with fence or concrete barrier shall be used in lieu of barrels. Timber curb must be placed according to the specifications (either staked or

overlapped). The only exception to this is where it may be physically impossible to maintain a through or local/emergency lane as per OCMC stipulations due to limited roadway width; in such cases the contractor may be permitted to omit the timber curb or concrete barrier provided that the trench sheeting is maintained a minimum of two (2') feet above the pavement.

(D) Pedestrian Steel Barricades and Class 2 (sawhorses) Barricades are not acceptable MPT devices in the roadway, and shall not be used in the roadway. The use of cones may be permitted only for short-term routing of traffic and/or to delineate lanes, but not to divide the work area from the right-of-way.

(E) Motorists must be given advance notice of a lane/street closure and/or changed lane patterns to safely channel traffic through the work zone. This notification shall include the use of Type III Barricades or concrete barriers, plastic barrels, signage, lane tapers, and flashing arrow boards as appropriate.

Unless otherwise directed by the Engineer the taper length and barrel spacing in traffic lane transitions approaching construction work areas in City Streets shall be as follows:

Along the project street - 150 feet taper length with barrels spaced 10 feet on centers
Along intersecting streets - 50 feet taper length with barrels spaced 10 feet on centers.

(F) In the event the Contractor is required to maintain two way traffic on a street that is not wide enough to accommodate two separate traffic lanes, or where heavy machinery or trucks are being operated immediately adjacent to vehicular or pedestrian traffic, uniformed flagperson(s) shall be used to assist in maintaining traffic as directed by the Engineer.

(G) Commercial driveway access shall be maintained, unless otherwise directed or approved by the Engineer. Unless otherwise specified in the Contract Documents or directed by the Engineer, the Contractor shall not be required to provide residential driveway access.

6.70.7. PROVISIONS FOR PEDESTRIAN TRAFFIC.

(A) Sidewalks may be occupied or closed only as provided for in the contract, or as otherwise approved by the New York City Department of Transportation (DOT).

(B) Where permission is granted to the Contractor to close a sidewalk, provisions must always be made for a clearly signed pedestrian passage on at least one side of the street and for pedestrian crossing at each intersection.

(C) The Contractor shall maintain at least one (1) pedestrian crossing in each direction at each intersection or as otherwise directed by the Engineer. Designated pedestrian crossings shall be protected from all excavation areas through the use of an approved barrier, temporary fence or other temporary devices, and in a manner approved by the Engineer. Pedestrian crossings over excavations shall be constructed with timber decking or steel plates lined with temporary fence attached to timber curbs on both sides.

(D) Pedestrian passageways must be separated from the work area using pedestrian steel barricades. The only exception to this is during the installation of final asphalt pavement at locations where pedestrian traffic density is low, in which case plastic barrels and caution tape may be approved as a substitute. If the pedestrian passageway is moved into the street, then the pedestrian passage should be separated from traffic using timber curb with orange plastic fence, or concrete barrier.

(E) If the traffic stipulations provide for the street to be closed except for Local and Emergency (L&E) Traffic, then pedestrian steel barricades shall be placed on both sides of the street (i.e., the entire street is considered to be the work area). If there are driveways, then after working hours the pedestrian fence shall be removed from each driveway opening on the side of the street abutting the L&E lane.

(F) Pedestrians must be notified of closed sidewalks by appropriate signage ("Sidewalk Closed/Use Other Side) at the corners of street intersections.

(G) Maintenance of pedestrian access to all abutting properties and pedestrian usage of the sidewalk areas, both new and existing, shall be continued at all times unless otherwise directed by the Engineer. Access may be provided by the use of planks with handrails and/or metal ramps and/or binder mixture ramps, for properties with residential usage (3-family or less) or, additionally, with an aluminum pedestrian bridge for higher density residential and/or commercial frontages. If the entrance is a double-wide entrance, access may be provided by working on only half of the width of entranceway at a time.

(H) Where any crosswalk is permitted to be closed, pedestrian steel barricades and a sign indicating "Crosswalk Closed" with an arrow pointing in the direction of the nearest open crosswalk shall be placed at the closure. In no case shall all parallel crosswalks be closed at two consecutive intersections (i.e., no pedestrian should have to walk more than one block to find an open crosswalk across the same street).

(I) The Contractor shall construct and maintain, as directed, suitable temporary walks and bridges for pedestrians. Temporary walks must be installed across trenches at all hydrant locations, and at crosswalks and commercial establishments as required or specified and as directed by the Engineer.

(J) Excavations shall be completely enclosed with timber curbs and/or lighted barricades and/or temporary fence as shown on the Contract Drawings, the Contractor's approved MPT Plans, and as directed by the Engineer.

6.70.8. PROVISIONS FOR BUSES AND PASSENGERS.

(A) The Contractor is required to contact OCMC and New York City Transit Authority - Transportation Planners at least six (6) weeks in advance of the projected start of construction work that may result in any bus stop relocation and/or bus rerouting (detour).

(B) The Contractor shall maintain access to and egress from buses along existing and proposed routes at all times during the execution of the work by temporarily relocating bus stops as shown in the MPT Plans - Temporary Relocation Plan for Bus Stops, and as directed and approved by the Engineer.

(C) The Contractor shall not commence working in the area of any existing bus stop until the Contractor has temporarily relocated the bus stop as required and has received the approval of the Engineer.

(D) The Contractor shall keep the area, to which a bus stop is relocated, free from and undisturbed by any construction activity or other impediment during the period of its use as a bus stop.

(E) The Contractor shall not work within an area to which a bus stop has been temporarily located until work within the area of the permanent bus stop (including work on its adjacent curb and/or sidewalk) has been substantially completed and until the area of the permanent bus stop has been restored for public use to the satisfaction and approval of the Engineer.

6.70.9. FIRE DEPARTMENT REQUIREMENTS.

(A) The preferred access for emergency vehicles shall be for two-way traffic; however, a minimum of one (1) eleven (11') feet lane will be acceptable if two-way access cannot be provided.

(B) Free access must be maintained to every fire hydrant, fire alarm box and standpipe connection. Hydrants shall be retained in service and shall be maintained accessible to the fullest extent feasible during construction. If a trench is located between the lane designated for emergency traffic and a hydrant(s), a walkway must be provided over the trench for access to each such hydrant location.

(C) The Fire Department shall be notified in advance by the Contractor whenever water mains and/or hydrants are to be placed in or out of service.

(D) When fire alarm boxes or fire alarm facilities will be affected by the construction work, the Contractor shall notify the Bureau of Fire Communications in advance of work.

(E) During the course of the work the Contractor may be required to relocate and/or support, protect and maintain existing Fire Department subsurface facilities within the limits of construction. The approximate location of Fire Department Facilities can be obtained by contacting the Bureau of Fire Communications. Base maps will be furnished to the Contractor upon request, in accordance with the requirements of **Subsection 1.06.23.(D)**.

6.70.10. STORAGE OF MATERIALS AND EQUIPMENT.

(A) Storage of equipment and materials within the right-of-way is a privilege granted to the Contractor, and is not a right, and shall be done in accordance with the requirements of **Sections 1.06** and **7.13**, herein.

6.70.11. STIPULATIONS.

(A) GENERAL:

(1) These stipulations shall become part of the New York City Department of Transportation's Permit for the subject project. To be valid such permit must be issued within three (3) months of the effective day thereof, otherwise permission to proceed after this time is contingent on review.

(2) The Contractor shall initiate the work in each stage within the limits of a defined work area as shown on the approved MPT Plan. The Contractor shall not advance his work area without the approval of the Engineer. The Contractor will be permitted to advance a work area only to the extent that he has substantially completed work within the existing work area. Substantial completion is hereby defined as including temporary pavement restoration and the return of such completed work area to public use as approved by the Engineer.

(3) All Contractor's vehicles, equipment and personnel must be kept within the limits of the designated work areas.

(4) The Contractor shall work in one half (1/2) the width of intersecting streets at a time and shall maintain the other half open to traffic during construction by either decking over open trenches or limiting trench construction, unless otherwise directed or approved by the Engineer.

(B) FOR SEWER AND WATER MAIN WORK:

(1) Unless otherwise specified in the contract documents or ordered in writing by the Engineer, there shall not be more than six hundred (600) linear feet of open trench in a roadway at any one time. Trenches backfilled but not yet temporarily paved, are considered open trenches.

(2) At all construction locations where traffic approaches sewer and trunk water main trenches, flashing lights shall be installed and maintained on the trench fencing at five (5') feet intervals along the entire length of the construction fencing. The appropriate large left/right arrows shall be installed on the approach face of the construction fencing.

(3) In addition, at all construction locations where traffic approaches perpendicular to the sewer and water main trench fencing, a Type lll timber barricade (or Type III breakaway barricade for Federally Funded projects) with two (2) flashing lights shall be installed and maintained. The barricade shall also have the appropriate large left/right arrows installed.

(4) Fill shall be provided, placed and compacted as directed by the Engineer at no direct payment.

(5) Asphaltic Concrete Mixture and/or Temporary Binder Mixture shall be provided and laid where directed by the Engineer. Cold patch will not be permitted.

(6) Final pavement restoration shall commence in a reasonable and timely manner as required in the Specifications and/or as stipulated by the Department and OCMC.

(7) The Contractor shall notify the Engineer prior to the installation of temporary or permanent paving in each location. Failure to send such notification promptly may result in rejection of the work.

(8) For Distribution Water Mains:

(i) Barrels shall be used to separate the work area from the vehicular lanes that are open to traffic.

(ii) Pedestrian steel barricades shall be placed along the sidewalk to separate pedestrian passage from the work area.

(iii) These provisions shall be maintained for each water main operation including excavation, main installation, backfill, temporary paving, and installation of concrete base, but excluding final asphalt paving.

(iv) For maintenance and protection of traffic in low pedestrian density areas MPT can be provided by using barrels and caution tape during laying of permanent asphaltic wearing course only, subject to approval by the Engineer.

(9) For Sewers/Trunk Water Mains:

(i) Timber Curb shall be used to divide the work area from the lanes that are open to traffic. The only exception to this shall be that if it is physically impossible to maintain a through or local/emergency lane according to OCMC stipulations due to insufficient roadway width, then in such cases the Contractor may be permitted to omit the timber curb so long as the sheeting is at least 2 feet above the pavement, and that the area outside the sheeting is properly backfilled.

(ii) Pedestrian steel barricades shall be placed along the sidewalk if there is no open traffic lane maintained along the curb line. If the street is closed except to Local and Emergency Traffic, then pedestrian steel barricades shall be placed on both sides of the street.

(C) FOR CURB AND/OR SIDEWALK WORK:

(1) The Contractor will be permitted to occupy one (1) ten (10') feet wide traffic lane immediately adjacent to the curb as a part of his work area for conducting construction operations during work periods. The work area shall be separated from the portion of the street that is open to traffic by the use of plastic barrels.

(2) For Maintenance and Protection of Traffic along sidewalks, pedestrian traffic density shall be rated as follows:

High Density Location: Where a pedestrian passageway provides less than fifteen (15) square feet of area per pedestrian during a continuous period of one or more hours during the Contractor's working day.

Low Density Location: Where a pedestrian passageway provides not less than fifteen (15) square feet of area per pedestrian during any continuous period of one or more hours during the Contractor's working day.

Pedestrian density shall be determined by dividing an area of passageway having a minimum length of one hundred (100') feet by the pedestrian count within that area.

(3) For Sidewalk Work:

(i) Case I: Low Pedestrian Density Areas
- Sidewalk may be closed
- Plastic barrels shall be used to separate the work area, [generally ten (10') feet wide parking lane and the width of sidewalk] from the vehicular driving lanes.
- Pedestrian steel barricades shall be placed at each corner, with a sign indicating "Sidewalk Closed/Use Other Side"

(ii) Case II: High Pedestrian Density Areas
- Maintain Pedestrian Pathway [four (4) to five (5') feet wide] in the Street
- Timber Curb shall be used to separate the vehicular lanes from the pedestrian pathway.
- Pedestrian steel barricades shall be used to separate the pedestrian pathway from the work area (which will be in the parking lane and width of sidewalk).

(4) One "PLEASE EXCUSE INCONVENIENCE, WE ARE INSTALLING SIDEWALK" sign, with two (2") inch lettering, shall be posted on a temporary pedestrian steel barricade at the end of each block on which sidewalk work is in progress.

Two cardboard or metal signs stating "PLEASE EXCUSE INCONVENIENCE, D.D.C. IS INSTALLING PEDESTRIAN RAMPS" sign, with two (2") inch lettering, shall be posted on temporary steel barricades at every intersection at which pedestrian ramps are being installed.

Signs are to be furnished by the Contractor and shall be installed where directed by the Engineer. Signs shall be installed prior to the start of sidewalk work at each location and removed immediately at the completion of the work at that location.

(5) Straight curb and its adjacent sidewalk areas are not to be disturbed simultaneously with corner curb and its adjacent sidewalk areas in the same block. One or the other must be in acceptable condition to be utilized by pedestrians.

(6) The Contractor may occupy and install pedestrian ramps at a maximum of two corners of any intersection at a time and shall complete and restore pedestrian ramps to service on one side of a street before disturbing curb and/or sidewalk on the other side of the street.

(7) A pathway having a minimum width of five (5') feet shall be provided at each work site for the maintenance of pedestrian traffic at all times, unless otherwise directed by the Engineer.

When sidewalk width, measured from back of curb, is fifteen (15') feet or greater, the pedestrian pathway may be provided in the sidewalk area. This will necessitate two separate excavation and concrete pouring operations and the use of flagperson to control pedestrian traffic while the Contractor's equipment is being operated across pedestrian pathways.

When sidewalk width is less than fifteen (15') feet, the Engineer will determine if sidewalk may be closed, and the location of the pedestrian pathway, if required. The surface of the pedestrian pathway, where required, shall be made safe and maintained by removing debris and by the use of temporary wooden bridging and ramps.

(8) All boundaries between construction work areas and pedestrian routes along sidewalks shall be clearly and continuously delineated with temporary pedestrian steel barricades.

(9) All boundaries between construction work areas and pedestrian pathways in the roadways must be protected by Type III Lighted Timber Barricades facing traffic, with a sign in two (2") inch lettering reading "Pedestrian Pathway", and demarcated by barrels, and heavy duty orange safety construction fencing. Fencing shall be orange in color and be of heavy duty construction grade flexible plastic (light duty plastic screening will not be accepted). Fencing shall have a minimum height of three (3') feet, of a type approved by the Engineer, and shall be held vertically in place for its full length. The Contractor shall securely attach fencing to barricades, barrels or other traffic control devices as may be directed.

(10) The Contractor shall provide adequate barricades lights and warning signs to demarcate and protect vehicular traffic and pedestrians from work areas and unoccupied work sites.

(11) When the Engineer permits a sidewalk to be closed, a sign reading "Sidewalk Closed-Use Other Side" with two (2") inch lettering shall be posted on a Temporary Pedestrian Steel Barricade, at points of closure.

(12) "NO PARKING - CONSTRUCTION" signs are to be furnished by the Contractor and shall be installed where directed by the Engineer. Where cardboard signs are used they shall have a minimum of 18 points and one side coated. Signs shall be installed at least twenty-four (24) hours prior to the start of work in each section and removed within twenty-four (24) hours after completion of the work in that section. At any section and during periods between construction phases (curbing and sidewalk) when no work is being performed, the Contractor shall remove these signs appropriately to permit normal parking until work is resumed in that section, all as directed by and to the satisfaction of the Engineer.

In addition, the Contractor shall furnish and display notification signs at each work site or at least one per block as directed along a series of or continuous work sites indicating thereon the name of the Contractor doing the work and the name of the agency for whom the work is being done. The names of subcontractors, when employed, shall be indicated thereon. Signs shall also include the permit number, the purpose of the street opening (e.g. installation of sidewalks), the start and scheduled completion dates of the work, and the Engineer's Field Office telephone number for receiving complaints. Signs shall be conspicuously displayed and of sufficient size to contain appropriate text. Such signs shall be clean, readable and in letters at least one and one-half (1-1/2") inches in height and shall conform to the Department of Transportation's specifications.

With approval of the Engineer, the Contractor may combine both required notification and no parking signs together.

(13) The Contractor shall make the full width of roadways, excluding a three (3') feet width adjacent to curb excavation or newly installed curb, available for traffic during non-working hours.

(14) Work on any corner from start of excavation to completion of sidewalk pavement shall not be more than seven (7) working days, except for corners requiring reset granite curb where completion of sidewalk pavement shall be extended to not more than fifteen (15) working days.

(15) The Contractor shall complete curb and/or sidewalk work on one side of street before disturbing curb and/or sidewalk on the other side of the street.

(16) All curb and sidewalk work shall be completed on a block prior to the start of pavement work along that block.

(17) Reconstruction of new sidewalks at each location shall be completed within seventy-two (72) hours of the start of excavation at that location. Failure to comply with this requirement shall be deemed a failure to maintain the site, thereby making the Contractor subject to the assessment of liquidated damages under the "Nonconformance" article of this Section.

(D) FOR ISOLATED OPERATIONS (e.g., Basins, Street Lights, etc.)

(1) Pedestrian steel barricades shall be used in sidewalk areas to separate pedestrian passageways from work areas.

(2) Barrels shall be used to separate the work area from vehicular lanes that are open to traffic.

(3) Open excavations shall be plated over at the end of each workday.

(E) FOR ROADWAY BASE

(1) Timber Curb shall be used to separate the work area from the remainder of the street.

(2) Pedestrian steel barricades shall be placed along the sidewalk abutting the work area. If the operation is in the full-width of roadway, then pedestrian steel barricades shall be placed on both sides of the street.

(F) FOR PAVEMENT MILLING (GRINDING) CONTRACTS

(1) Pavement milling on any block shall be completed within two (2) working days from the start of such work.

(2) Immediately after milling, the Contractor shall construct temporary ramps of Binder Mixture or Asphaltic Concrete Mixture (Item 4.02 CA or 4.02 CB) as provided in the Bid Schedule, around and to the top of all City owned and privately owned street hardware that protrude above adjacent pavement areas, that have been milled, as directed by the Engineer; and, the Contractor shall maintain said ramps until they have been removed by others to permit laying of the new wearing course but not beyond a period of fifteen (15) days after completion of all his/her work within that City block, as approved by the Engineer. After this period of fifteen (15) days, maintenance of those ramps shall be the responsibility of others.

(3) The Contractor shall, likewise, immediately construct and maintain temporary ramps of binder mixture or asphaltic concrete mixture, as provided in the Bid Schedule, at pedestrian ramps, transition areas, and at driveways as deemed necessary and directed by the Engineer. The use of binder mixture or asphaltic concrete mixture at driveways shall be limited to a width of not more than eight (8') feet for single driveways and not more than twelve (12') feet for double driveways. The slope of temporary ramps at street hardware shall range between 1:10 and 1:6 (rise:run). The use of binder mixture or asphatic concrete mixture at pedestrian ramps shall be limited to a width of not more than four (4') feet and a slope of approximately 1:12. The slope of temporary ramps at driveways and transition areas shall be approximately 25% [approx. a three (3") inch rise in one (1') feet]. Where there is no existing concrete, binder or stabilized soil base the milling of the wearing course shall be limited to a six (6') feet wide pavement key adjacent to curbs. Where soil base is exposed, the use of binder mixture or asphaltic concrete mixture is limited to a depth of one and one-half (1-1/2") inches.

(4) Plastic barrels shall be used to divide the work area from the vehicular lanes that are open to traffic. Barrels and caution tape shall be placed on the sidewalk abutting the work area; if the milling/paving is full-width, then the barrels and tape shall be placed on both sides of the street.

(5) The Contractor shall furnish, install and maintain a plastic barrel, with a battery operated flasher unit mounted on it, to be placed on every street casting that requires temporary asphaltic ramp under this contract while it is unsafe, in the opinion of the Engineer, for motor vehicles to pass over the casting. No direct payment will be made for the provision of plastic barrels at such unramped street hardware. In addition, no street casting shall remain in that unsafe condition for more than forty-eight (48) hours or through a weekend or holiday period without being temporarily ramped with binder mixture.

(6) Maintenance of temporary ramps is deemed included under Item 6.70-R, MAINTENANCE AND PROTECTION OF TRAFFIC, except that asphalt will be paid for under other scheduled contract item. Therefore, the Contractor shall be subject to the "NONCONFORMANCE" provisions of this Section for each hardware ramp not installed or maintained by the Contractor as directed by the Engineer.

(7) Pavement grinding in all streets shall be executed along one curb line at a time in each block and traffic shall be maintained as indicated for each case in the sketch titled "MAINTENANCE OF TRAFFIC TYPICAL SCHEMES DURING GRINDING OPERATIONS" included at the end of this Section.

(8) When grinding pavement in mainly residential, low traffic volume streets narrower than thirty (30') feet wide, the Contractor may be permitted to close the roadway but he shall be required to maintain access for local and emergency traffic at all times.

(9) Where the pavement being ground in a two way roadway is not wide enough to maintain two separate traffic lanes, flagpersons shall be used to maintain traffic as directed by the Engineer.

(10) The full width of all roadways shall be available for traffic during non-working hours.

(11) Not more than one-quarter (1/4) of any intersection may be ground at a time where two-way traffic is being maintained. For one-way streets crossing one-way streets, up to one-half of the intersections may be ground at a time. The Contractor shall install Plastic Barrels [six (6') feet on center] at the perimeter of ground intersections until the grinding is completed, and binder mixture or asphaltic concrete mixture has been installed.

(12) A minimum of one sign shall be installed for each direction of traffic at streets crossing the grinding operations, which shall notify vehicular traffic of "bump ahead" and shall be installed fifty (50') feet away from the edge of grinding at the intersections. The signs shall remain while the Contractor is responsible for street maintenance.

(G) FOR RESURFACING CONTRACTS

(1) The work on any block from start of curb and sidewalk work to completion of final roadway pavement shall not be more than thirty (30) calendar days.

(2) The Contractor shall occupy not more than one lane in the roadway when adjusting street hardware, replacing or resetting curb, or performing milling at the curb.

(3) In addition to notification signs, the Contractor shall furnish and display no parking signs. These signs shall have a white glossy finish with black one (1") inch block lettering. Where cardboard signs are used they shall have a minimum of eighteen (18) points and one side coated. Each of these signs shall be a minimum of fourteen (14") inches wide by eighteen (18") inches high and contain the following text:

NO PARKING
THIS STREET IS SCHEDULED FOR RESURFACING WORK STARTING ON (*insert specific date*). YOUR COOPERATION IS REQUESTED.

<u>DEPARTMENT OF DESIGN AND CONSTRUCTION</u>
CONTRACT NO. (*insert Contract No.*)

The Contractor shall post these no parking signs on all street lampposts for a spacing of at least one sign every one hundred (100') feet on streets to be milled or resurfaced, a minimum of forty-eight (48) hours prior to the start of any work by the Contractor. Where lampposts are not available for the posting of at least one sign every one hundred (100') feet of curb on each side of the street, signs may be posted on trees, traffic posts, wood posts, etc., as directed, to obtain a sign spacing of not more than one hundred (100') feet on each side of the street. The Contractor will <u>not</u> be allowed to advance his work in any street unless said signs have been posted or a written waiver is secured from the Assistant Commissioner, Infrastructure Construction prior to start of work. Where such waiver has been granted, a credit of fifty ($50) dollars will be taken for each block not posted; however, a credit of one thousand ($1,000.00) dollars will be taken for each block not posted where such waiver has not been granted.

With approval of the Engineer, the Contractor may combine both required notification and no parking signs together.

Where resurfacing work does not occur immediately after the milling operation, new signs with the new dates shall be installed at least forty-eight (48) hours prior to the resurfacing work. As the resurfacing work progresses, the Contractor shall remove and dispose of the cardboard signs.

(4) Roadway Preparation Work for Paving.

(i) Roadway preparation work on any block, which shall include but not be limited to all curb, milling, pavement key, and hardware adjustment work, shall be completed within seven (7) calendar days from the start of preparation work.

(ii) Contractor shall delineate the area of work in progress at the curb line for pedestrians by installing orange safety tape on plastic barrels [ten (10') feet o.c.].

Some of these plastic barrels may be eliminated when the tape can be supported on poles, trees, etc., providing support at ten (10') feet intervals.

(iii) At the ends of work areas and at street crossings the Contractor shall install plastic barrels at eight (8') feet ± o.c. At partial street closings the Contractor shall separate the work area and the traffic by installing plastic barrels at ten (10') feet ± o.c.

(iv) Installation of plastic barrels and orange safety tape must be completed prior to start of work within any city blocks, and be removed within twenty-four (24) hours after completion of milling or paving, etc.

(v) The Contractor shall construct temporary safety ramps around adjusted roadway hardware, as ordered by the Engineer, and shall maintain these ramps prior to placement of the wearing course. Ramps shall not exceed a 1:10 slope and shall be installed to the top of hardware under Item 4.02 BA-R, PRE-IDENTIFIED BINDER MIXTURE. The Contractor shall remove the temporary ramp material immediately prior to placing the finished pavement. The cost of removing temporary ramp material shall be included in the price bid for the appropriate Grinding Existing Asphaltic Concrete Wearing Course.

(vi) Maintenance of temporary ramps is deemed included under Item 6.70-R, MAINTENANCE AND PROTECTION OF TRAFFIC. Therefore, the Contractor shall be subject to the "NONCONFORMANCE" provisions of this Section for each hardware ramp not installed or maintained by the Contractor as directed by the Engineer.

(vii) The Contractor shall furnish, install and maintain a plastic barrel, with a battery operated flasher unit mounted on it, to be placed on every street casting that projects above the roadway surface while it is unsafe, in the opinion of the Engineer, for motor vehicles to pass over the casting.

(H) PAVING WORK.

(1) Unless otherwise directed by the Engineer or prescribed in the Contract, all streets shall be paved one-half their width at a time while maintaining traffic on the other half.

(2) During resurfacing of all roadways, access must be made available for emergency vehicles at all times. All local thru traffic shall be detoured and signs indicating "Street Closed to Thru Traffic" and detour signs shall be posted by the Contractor in accordance with the National MUTCD plus the NYS Supplement.

(3) When paving mainly residential, low traffic volume streets narrower than thirty (30') feet wide, the Contractor will be permitted to close the roadway but he shall be required to maintain access for local and emergency traffic at all times.

(4) The full width of all roadways shall be available for traffic during non-working hours.

(5) Unless otherwise noted, one-half width or three-quarters of all intersections shall be maintained for traffic, during working hours, in order to maintain traffic in all directions.

(6) Where adjustment of street hardware is required, the Contractor shall complete the paving operations within fifteen (15) working days of the start of roadway preparation work (milling of pavement, adjusting manholes and catch basins, etc.) within each block.

(7) Where adjustment of street hardware is not required, the Contractor shall complete the paving operations within six (6) working days of the start of roadway preparation work (milling of pavement, etc.) within each block.

(8) Pavement marking on any block shall be completed within ten (10) calendar days after completion of the paving work.

(I) FIVE BOROUGH BIKE TOUR, NYC MARATHON ROUTE AND OTHER SCHEDULED EVENT LOCATIONS:

In order to accommodate the Five Borough Bike Tour and the New York City Marathon Race, the Contractor shall be required to open the full width of streets along the routes of the Five Borough Bike Tour/NYC Marathon, as applicable, at least fifteen (15) days prior to the date of the scheduled event. Also, the Contractor shall be required to complete all work started within a half mile radius of the marathon route. Generally, the Five Borough Bike Tour occurs the first Sunday of May and the New York City Marathon occurs the first Sunday in November. For date and route information of these events, see the following:

Five Borough Bike Tour: Bike New York, 891 Amsterdam Avenue, New York, NY 10025 · 212 932 BIKE · info@bikenewyork.org

New York City Marathon: New York City Sports Commission, 2 Washington Street, 15th Fl., New York, NY 10004 / Toll Free: 877.NYC.SPORTS / Fax: 212.788.7514

The Contractor shall be required to perform the following work within the project limits along the Five Borough Bike Tour/NYC Marathon route, as applicable, at least fifteen (15) days prior to the date of the scheduled event:

- All stored materials shall be removed.
- All excavations and trenches which cannot be permanently restored shall be backfilled (no plates allowed) and temporarily paved with Asphaltic Concrete Mixture [two (2") inches thick in sidewalk areas and four (4") inches thick in roadway areas].
- A temporary overlay of the existing pavement designated to be reconstructed shall consist of 1-1/2 inches of Asphaltic Concrete Wearing Course laid on a leveling course of asphaltic concrete mixture or binder mixture, as provided in the Bid Schedule, from curb to curb.

Likewise, the Contractor will not be permitted to proceed with work at any location where any civic parade or other official activity is scheduled and where the Contractor cannot complete such work fifteen (15) days prior to the date of the scheduled activity.

Payment for all work required herein above, including removing of stored materials, backfilling, removal of plates, removal of temporary asphaltic concrete overlay, and all other work required to meet these requirements, shall be deemed to be included in cost of the item for MAINTENANCE AND PROTECTION OF TRAFFIC, except that the cost of providing a temporary one and one-half (1-1/2") inches asphaltic concrete wearing course overlay and leveling course shall be paid under the applicable items.

6.70.12. NONCONFORMANCE. No payment will be made under Maintenance and Protection of Traffic for each calendar day during which there are deficiencies in compliance with the foregoing requirements that last more that 1-hour, as determined by the Engineer.

The amount of such calendar day non-payment will be determined by dividing the lump sum amount bid for Maintenance and Protection of Traffic by the number of calendar days between the date the Contractor commences work and the date of completion as designated in the proposal, without regard to any extension of time.

If the Contractor fails to maintain and protect traffic adequately and safely for a period of three (3) hours, the Engineer may correct the adverse conditions by any means he deems appropriate, and shall deduct the cost of the corrective work from any monies due the Contractor. The cost of this work shall be in addition to the non-payment for Maintenance and Protection of Vehicular & Pedestrian Traffic stated above.

However, where major nonconformance with the requirements of this specification is noted by the Engineer, and prompt Contractor compliance is deemed not to be obtainable, all contract work may be stopped by direct order of the Engineer, regardless of whether corrections are made by the Engineer as stated in the paragraph above.

Furthermore, in addition to the remedies specified above, in the event the Contractor fails to comply, within three (3) consecutive hours after written notice from the Engineer, with the requirements of this contract and the specifications in the matter of providing facilities and services for the maintenance and protection of traffic, the Contractor shall pay to the City of New York, until such notice has been complied with or rescinded, the sum specified in Schedule "A" per calendar day, for each instance of such failure, as liquidated damages and not as a penalty, for such default.

Any money due the City of New York under this provision shall be deducted from the amounts due or to become due to the Contractor for work performed under this contract.

6.70.13. PRICE TO INCLUDE. The lump sum price bid shall cover the cost of all labor, materials, plant, equipment, insurance, and incidentals required to maintain and protect pedestrian and vehicular traffic, including furnishing, installing, relocating and maintaining lighted barricades, plastic barrels with flashers, temporary timber curbs, construction signs, flashing arrow boards, variable message signs, safety orange construction fencing, temporary pedestrian steel barricades, warning devices, cones, flags, lights, temporary ribbon, temporary pavement markings, etc., unless otherwise provided for under other scheduled contract bid items; providing and maintaining roadway plates; constructing and maintaining temporary ramps; and all incidentals necessary for completing the work, all in accordance with the Contract Drawings, approved MPT Plans, the specifications, and the directions of the Engineer.

Payment will be made in proportion to the percentage of actual contract completion. The final payment for this item will be in direct proportion (whether higher or lower) to the final contract value (minus all change orders of any kind and any overruns for Traffic Enforcement Agents, Flaggers, Tree Consultants, BMP items, clean fill, contaminated/hazardous materials and other bid item overruns that do not require MPT as determined by the Engineer) as compared to the original contract value.

Providing and placing of Asphaltic Concrete Mixture and/or Binder Mixture for temporary ramps and temporary pavement and trench restorations will be paid for under the appropriate scheduled contract items.

Where there is no scheduled Lump Sum item provided for this work, all MPT work shall be done in compliance with the requirements of this section and payment will be made under the unit price items bid for the various MPT devices provided in the bid schedule. Any additional MPT devices not provided for in the bid schedule but shown on the Contract Drawings, specified herein this Section 6.70, or specified in the OCMC Traffic Stipulations shall be deemed to be included in the unit prices bid for all of the scheduled contract items.

Payment will be made under:

Item No.	Item	Pay Unit
6.70	MAINTENANCE AND PROTECTION OF TRAFFIC (for Construction and Reconstruction type Contracts)	LUMP SUM
6.70 -G	MAINTENANCE AND PROTECTION OF TRAFFIC (for Grinding type Contracts)	LUMP SUM

6.70 -P	MAINTENANCE AND PROTECTION OF TRAFFIC (for Installation of Pedestrian Ramp type Contracts)	LUMP SUM
6.70 -R	MAINTENANCE AND PROTECTION OF TRAFFIC (for Resurfacing type Contracts)	LUMP SUM
6.70 -S	MAINTENANCE AND PROTECTION OF TRAFFIC (for Installation of Sidewalk type Contracts)	LUMP SUM

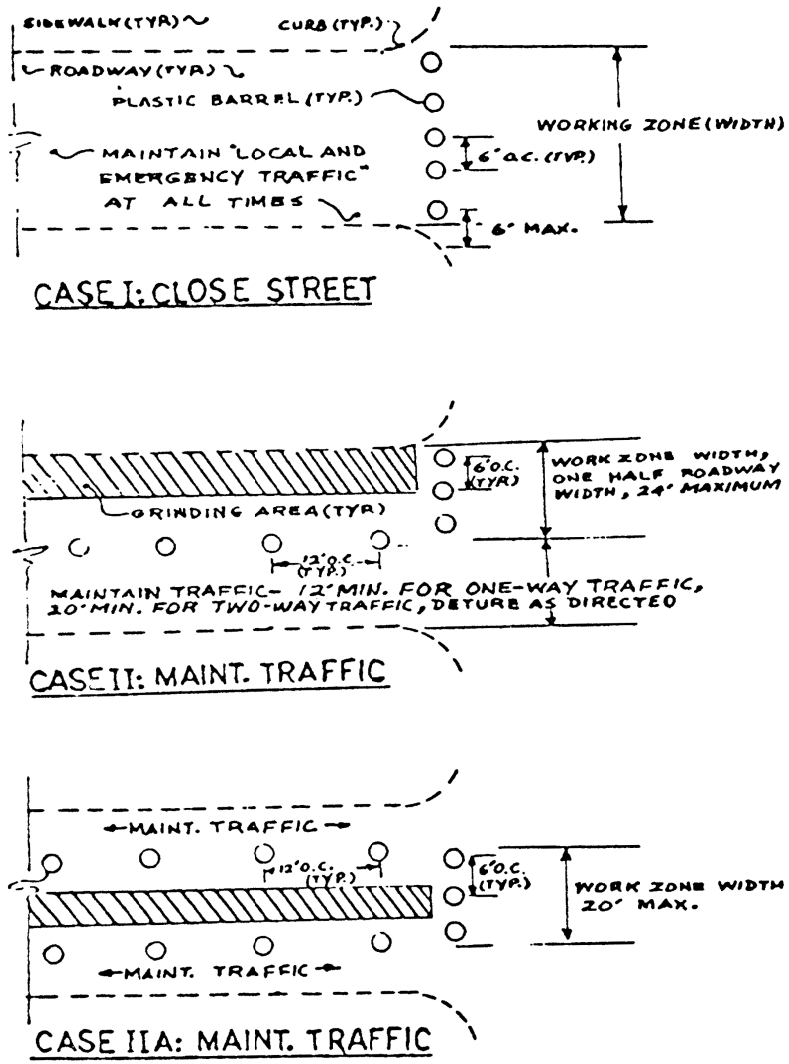

Notes

1. *See Section 6.70 for additional requirements for the Maintenance of Traffic.*
2. *Contractor shall maintain minimum of one-twelve foot (12') lane for one way traffic streets wider than 30, at all times*
3. *Length of occupied grinding work zone is limited to 6 city blocks up to 2000' maximum, at a time.*
4. *Work zone shall be delineated with plastic barrels and signs as directed.*

CITY OF NEW YORK
DEPARTMENT OF TRANSPORTATION

MAINTENANCE OF TRAFFIC
TYPICAL SCHEMES
DURING GRINDING OPERATIONS
(NOT TO SCALE)

SECTIONS 6.71 AND 6.72 (VACANT)

SECTION 6.73 - Removing, Furnishing and Installing Parking Meter Posts

6.73.1. DESCRIPTION. Under this section, the Contractor shall remove existing parking meter posts where they interfere with new construction, and furnish and install new parking meter posts in the new work at locations designated by the New York City Department of Transportation's Division of Traffic Operations, Parking Operations, all in accordance with the Contract Drawings, the specifications and the directions of the Engineer.

6.73.2. MATERIALS. Posts shall consist of 2 inch Nominal Schedule 40 (ASTM A 53) hot-dipped galvanized, continuous welded steel pipe.

6.73.3. METHODS. The Contractor shall notify Parking Operations, Meter Maintenance section fourteen (14) days prior to start of work to remove the parking meters from the posts which are required to be removed. The following information must be given: (1) parking meter numbers; (2) location of meters; and, (3) date when meters can be re-installed. The posts shall then be removed from their foundations and discarded away from the site by the Contractor.

Within 24 hours of being directed by the Engineer, in writing, and **following** the installation of Parking Signs in accordance with **Section 6.83**, **Subsection 3.(G)2**, the Contractor shall be required to install new posts in the new work at the locations designated by Parking Operations and in compliance with their standards. Under no circumstances are posts to be installed without first installing parking signs. New additional posts may be required by Parking Operations to be furnished and installed by the Contractor at locations where existing posts are missing or at other locations on the site designated by that agency. The Contractor shall promptly notify Parking Operations, Meter Maintenance section to reinstall the parking meters on the installed posts. Failure to install all specified parking meter posts within 24 hours of being notified to do so will result in the Contractor being assessed $300 per day as Liquidated Damages and not as a penalty for each post not in place within 24 hours of receiving written notification from the Engineer to have it installed.

Any money due to the City of New York under this provision shall be deducted from the amounts due or to become due to the Contractor for work performed under this contract.

Meter posts are to be installed vertically plumb. The Contractor shall be responsible for selecting the proper meter post installation type (Type A - standard in-ground, Type B - bumper pipe, Type C - vault anchor base, or Type D - in-gound dirt) and corresponding meter pipe fabrication (Bureau of Parking Standard Drawings SK-1A, SK-2A, SK-3A, and SK-4A) based upon field conditions and installation type originally removed from the specific location, in accordance with the applicable Bureau of Parking Standard Drawings.

6.73.4. MEASUREMENT.

(A) The quantity to be measured for payment under Removing Existing Parking Meter Posts shall be the number of posts actually removed from their present locations.

(B) The quantity to be measured for payment under Furnishing and Installing Parking Meter Posts shall be the number of new posts required by Parking Operations that were actually installed in the new work by the Contractor, to the satisfaction of the Engineer. Payment under this item will only be

made following the issuance of a Letter of Acceptance by Parking Operations, Meter Maintenance section, to the Engineer.

6.73.5. PRICES TO COVER.

(A) The contract price for Removing Existing Parking Meter Posts shall be the unit price bid per each post removed and shall cover the cost of all labor, materials, plant, equipment, insurance, and incidentals necessary to remove and dispose of the existing parking meter posts, all in accordance with the Contract Drawings, the specifications and the directions of the Engineer.

(B) The contract price for Furnishing and Installing Parking Meter Posts shall be the unit price bid per each post satisfactorily furnished and installed and shall cover the cost of all labor, materials, plant, equipment, insurance, and incidentals necessary to furnish and install new parking meter posts, all in accordance with the Contract Drawings, the specifications and the directions of the Engineer.

Payment will be made under:

Item No.	Item	Pay Unit
6.73 A	REMOVING EXISTING PARKING METER POSTS	EACH
6.73 B	FURNISHING AND INSTALLING PARKING METER POSTS	EACH

SECTION 6.74 - Steel Plate at Tree Wells

6.74.1. INTENT. This section describes the construction and installation of steel plate for tree wells.

6.74.2. DESCRIPTION. Under this section, the Contractor shall fabricate and install steel plate for tree wells as shown on the Contract Drawings, and in accordance with specifications and the directions of the Engineer.

6.74.3. MATERIAL. Steel plate shall comply with requirements of ASTM Designation A 36 and be of the dimensions shown on the Contract Drawings.

Stud anchors, furnished in the dimensions shown on the Contract Drawings, shall conform to the specification for Cold-Finished Carbon Steel Bars and Shafting, ASTM A 108, Grade 1015 or 1020.

Galvanized coating shall be in accordance with the requirements of ASTM A 123.

Primer shall be a zinc dust-zinc oxide primer conforming to Federal Specifications TT-P-641d.

Paint shall meet the requirements of Federal Specification TT-P-37C and shall be of an approved black color.

6.74.4. CONSTRUCTION METHODS. The Contractor shall fabricate and install steel plate at the tree wells as shown on the Contract Drawings and to the satisfaction of the Engineer.

Steel plates shall be cut to the lengths shown on the Contract Drawings. Where joints are required, plates shall be welded together at the corners to form the tree well perimeters.

Prior to welding, all surfaces that are to be welded shall be cleaned for all rust, dirt, paint and other adhering material to bright bare metal. The cleaning shall be done with wire brush, sandblasting, or other approved means.

After welding, all welds shall be ground smooth, all steel surfaces shall be galvanized, and a coat of primer shall be applied to all surfaces of the steel plates.

The Contractor shall shop weld four (4) stud anchor bars equally spaced to each steel plate, for a total of sixteen (16) studs per tree well frame.

Studs shall be end-welded by the electric-arc method. Welding operators shall have had previous experience and proficiency in the application of studs by the use of automatic end-welding electric-arc equipment, and shall be licensed by the State of New York.

The stud itself shall serve as the electrode in an electromechanical circuit which automatically controls the arc, welding time, and final plunging home of the stud. Equipment shall include a stud welding tool, control for welding time and current, the prefluxed stud, a ceramic ferrule, and a DC power source. All equipment that the Contractor proposes to use shall be subject to the approval of the Engineer.

The welding procedures shall be in accordance with those as recommended by the stud manufacturer.

After the studs have been welded to the plates, they shall be visually inspected and given a light blow with a hammer. Any stud which does not have a complete end weld and any stud which does not emit a ringing sound when given a light blow with a hammer shall be struck and bent towards the nearest end of the steel member until it is about twenty (20) degrees from its normal position. Studs which fail under this test shall be replaced at the Contractor's expense.

Fabricated steel plates shall be set in place prior to placement of new trees and adjacent concrete base to be placed under other contract items, at the grades and locations as shown on the Contract Drawings and as directed by the Engineer.

Then after embedment in the concrete base but before placement of the adjacent paving blocks or other paving materials, the Contractor shall apply two (2) coats of finish paint to all exposed surfaces of the plates.

6.74.5. MEASUREMENT. The quantities to be measured for payment shall be the total number of linear feet of steel plate actually installed to the satisfaction of the Engineer.

6.74.6. PRICE TO COVER. The contract price bid per linear foot for Steel Plate at Tree Wells shall cover the cost of all labor, material, plant, equipment, insurance, and incidentals required to furnish and install steel plate frames at tree wells, all in accordance with the Contract Drawings, the specifications and the directions of the Engineer.

Payment will be made under:

Item No.	Item	Pay Unit
6.74	STEEL PLATE AT TREE WELLS	L.F.

SECTION 6.75 - Grinding Existing Asphaltic Concrete Wearing Course

6.75.1. WORK TO INCLUDE. Under this section, the Contractor shall be required to grind (mill) and remove a portion of the existing asphaltic wearing course and granular base to contour the roadway to the required grade, depth, elevations and limits specified by the Engineer and shall dispose of all asphaltic millings and other material; all in accordance with the specifications, the Contract Drawings, and the directions of the Engineer.

6.75.2. METHODS.

(A) GENERAL. Grinding of existing asphaltic concrete wearing course, under this Section, shall be used in the following situations as ordered by the Engineer: to eliminate high points in the existing pavement prior to resurfacing; to maintain clearances under bridges or structures when additional pavement thickness would hamper clearances; to achieve appropriate curb reveal; and, to remove poor wearing course or correct ponding situations.

The Contractor shall fully grind these areas down to the required depth, from curb to curb or along the curb line, to contour the roadway pavement as directed by the Engineer. All grinding operations shall be done using an acceptable milling method, taking care not to damage the pavement to remain and in a manner that prevents dust and other particulate matter from escaping into the air.

The intent is to grind to an average depth of 1-1/2" to 2", as directed by the Engineer, except as noted in the attached sketch. Where the Contractor exceeds the intended grinding limits, without prior approval from the Engineer, he/she shall restore the roadway with Binder Mixture to the intended elevation, at no cost to the City. In addition, no payment will be made for any additional grindings made beyond the intended grinding limits specified above.

(B) EQUIPMENT. All grinding equipment shall be as approved by the Engineer. Any teeth in the milling drum that become dislodged, broken or unevenly worn shall be replaced immediately with teeth of the same length as the remaining teeth in that row.

(C) ASBESTOS TESTING. Prior to performing any grinding operations at any site location, the Contractor shall be required to take two 2" diameter pavement core sample of the existing asphaltic concrete wearing course for every 5,000 linear feet of roadway, or portion thereof, to be tested for the presence or absence of asbestos by the Contractor's independent testing laboratory. The exact location of each pavement core sample shall be as directed by the Engineer. This work shall be performed and the test results known to both the Contractor and the Engineer at least two (2) weeks prior to performing grinding operations under this Section.

The Contractor's independent testing laboratory shall be an approved N.Y.S. licensed testing laboratory certified to test for the presence of asbestos in an asphaltic concrete material mix. The testing laboratory shall be required to take immediate chain-of-custody of the core samples as they are taken in the field, transport the samples to their laboratory for testing, and dispose of them at the end of the work. Under no circumstance shall core samples be taken without the direct supervision of the testing laboratory. The testing laboratory shall then notify both the Contractor and the Engineer of the results.

Should the presence of asbestos be found to exist within the asphalt pavement designated to be removed under this item, the Contractor shall immediately stop all grinding operations until otherwise directed by the Engineer and the limits of asbestos contamination has been determined by subsequent sampling. Asbestos contaminated asphaltic concrete wearing course shall <u>not</u> be removed under this item but if it is required to be removed, said work shall be done as "Extra Work" under Article 26 of the Standard Construction Contract.

No additional payment will be made for this work.

(D) PREPARATION WORK. Where new proposed asphaltic concrete pavement is to meet existing asphalt pavement, the Contractor shall saw-cut a joint line in the existing asphaltic wearing course, for a depth of 1-1/2". The joint line shall cross the full width of roadway pavement or where directed by the Engineer for localized areas. Asphaltic concrete material adjacent to these sawcut lines shall be removed to a depth of 1-1/2" to form a squared out joint for the proposed of keying the new asphalt pavement to the existing asphalt pavement. Rounded transition areas will not be acceptable.

At all street hardware the asphaltic concrete material shall be removed for a depth of 1-1/2" by grinding and cutting out the asphaltic material to expose existing frames of street hardware. Any remaining material, within that 1-1/2" depth, around and adhering to street hardware shall be completely removed by hand and/or hand held cleaning equipment. Rounded transition areas will not be acceptable.

Where snow plowable raised pavement markers exist in the roadway pavement, the Contractor shall be required to carefully remove and dispose of said markers in a manner approved by the Engineer and at no additional cost to the City.

(E) MILLING (GRINDING) OPERATIONS. The Contractor shall grind the specified areas down to the required depth and grades in the existing asphaltic concrete wearing course and/or granular base using an acceptable milling and dust control methods and equipment. Care shall be taken to minimize dust pollution and damage to the pavement to remain. For dust control methods and equipment, the Contractor shall employ dust collection and/or watering devices, as approved by the Engineer, without which no milling will be allowed.

All grindings shall be removed and the remaining surface immediately swept, mechanically, so that the surface of the remaining pavement is free of loose asphaltic concrete, to the satisfaction of the Engineer. The grindings shall be loaded directly into dump trucks and shall be satisfactorily disposed of away from the site as excavated material by the Contractor. Each truck load shall be hand leveled by raking prior to measurement and covering for removal.

Furthermore, grinding in streets without a formal base is limited to a 6' wide pavement key adjacent to curbs, otherwise milling is only permitted within the asphaltic concrete wearing course. Where dirt base is exposed, the use of binder mixture is limited to a depth of 1-1/2".

The Contractor shall exercise care during the grinding operations to avoid damaging any concrete base or granite block pavers existing beneath the asphaltic wearing course. Where concrete base or granite blocks are encountered during the grinding operations, the Contractor shall immediately halt operations and notify the Engineer. The Contractor is not permitted to grind into granite blocks.

The City may require the Contractor to perform additional grinding at locations ground previously under this contract to correct any deficiency, or at areas where resurfacing has been completed by others.

Provisions shall be made for removal of any water that may be trapped due to the milling operation and surface of milled areas shall be swept clean prior to being opened to traffic and prior to the subsequent resurfacing operation.

6.75.3. MEASUREMENT. The quantity to be measured for payment shall be the number of cubic yards of existing asphaltic concrete wearing course millings removed, from within the designated limits specified above, calculated as either the number of square yards of pavement surface milled divided by eight (8) or the volume obtained by vehicle measurement, whichever is less.

In determining a vehicle measurement, only water level loads that have been raked by the Contractor to a flat exposed surface will be accepted by the Engineer and no allowance will be made for any crown or peak of the load.

No measurement or payment will be made for any additional grindings made beyond the intended grinding limits specified above, unless the Contractor is specifically ordered, in writing, by the Engineer to grind below the above specified limits.

6.75.4. PRICE TO COVER. The contract price per cubic yard of Grinding Existing Asphaltic Concrete Wearing Course shall cover the cost of furnishing all labor, plant, equipment, insurance, and necessary incidentals required and completing the work, including, but not limited to, sampling, testing and disposal of material samples tested for asbestos, sawcutting joints, grinding and cutout of existing asphaltic material at street hardware and at sawcut joints, removing pavement markers where applicable, loading said material into dump trucks, and disposing of ground materials (millings); all in accordance with the Contract Drawings, the specifications, and the directions of the Engineer.

Installation of binder mixture for temporary ramps will be measured and paid for under other items.

Payment will be made under:

Item No.	Item	Pay Unit
6.75	GRINDING EXISTING ASPHALTIC CONCRETE WEARING COURSE	C.Y.

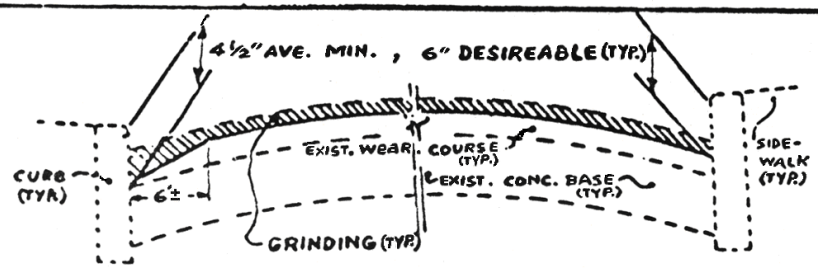

CASE I: FULL WIDTH

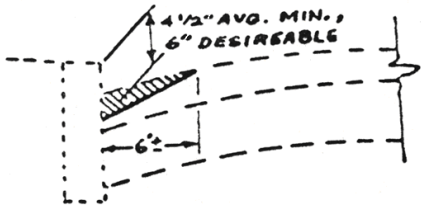

CASE II: PAV'T KEY

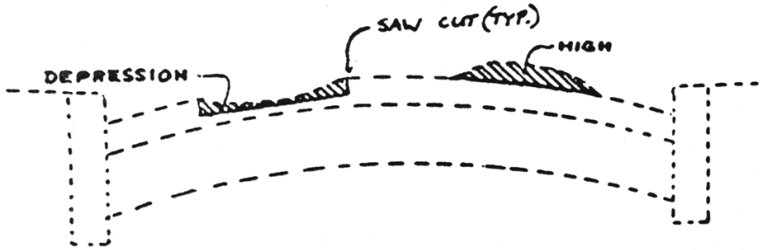

CASE III: LOCALIZED

Notes

1. *See Section 6.70 for additional requirements for the Maintenance of Traffic.*
2. *Payment for the grinding item (and its delivery) is limited only to the asphaltic roadway materials. (where applicable)*
3. *For grinding at partially asphaltic roadway materials see other detail (attached.)*
4. *Removal of asphaltic materials all street hardware (including private utilities), to depth of 1-1/2" below cover (rim) is included in the prices bid for the grinding items.*
5. *Contractor shall safety ramp all street hardware and sharp grinded edges in the roadway with binder mixture, within 24 hours after grinding.*

CITY OF NEW YORK
DEPARTMENT OF TRANSPORTATION

TYPICAL GRINDING DETAIL
ASPHALTIC MATERIALS
NOT TO SCALE

SECTIONS 6.76 THRU 6.81 (VACANT)

SECTION 6.82 - Removing Existing Traffic and Street Name Signs and Sign Posts

6.82.1. DESCRIPTION. Under this section, the Contractor shall be required to remove those existing traffic and street name signs and traffic and street name sign posts designated by the Engineer.

6.82.2. METHODS. Prior to the removal operations, the Contractor shall notify the Engineer to have the location surveyed. The Contractor shall remove the designated signs and posts and accessories at the locations as directed by the Engineer. Care shall be exercised in the operation so as not to damage the materials to be removed.

All existing regulatory, informational, directional, and street name signs designated to be removed and replaced with new or temporary regulatory, informational, directional, and street name signs, shall remain in place until immediately prior to their replacements, as directed by the Engineer, so as to avoid any disruption to vehicular and pedestrian traffic and the community. No sign location shall remain unsigned for any period of time beyond the working hours of the day of sign removal at that location.

All removed materials shall be delivered to the New York City Department of Transportation's Bureau of Traffic Operations (B.T.O.) Yard designated by the Engineer. For each delivery, the Contractor shall prepare a list of all materials returned to the B.T.O. Yard. Each list shall be signed off at the yard by an authorized B.T.O. representative, as verification of the Contractor's delivery. The original and one (1) copy of the verified list shall be submitted to the Engineer for his records. Payment for any removed and delivered materials will not be made without an accompanying verified list.

After the removal of the existing sign posts, the Contractor shall restore the disturbed sidewalk or pavement with materials approved by and to the satisfaction of the Engineer.

6.82.3. MEASUREMENT. The quantity to be measured for payment shall be the actual number of square foot area of existing traffic and street name signs removed and delivered to the Bureau of Traffic Operations Yard.

The quantity to be measured for payment shall be the actual number of linear foot length of existing traffic and street name sign posts removed and delivered to the Bureau of Traffic Operations Yard.

6.82.4. PRICE TO COVER. The contract price per square foot of existing traffic and street name signs removed, shall cover the costs of all labor, materials, plant, equipment, and incidentals required to remove the designated signs including accessories and delivering them to the Bureau of Traffic Operations Yard, all as shown on Contract Drawings and in accordance with the specifications and directions of the Engineer.

The contract price per linear foot of existing traffic and street name sign posts removed shall cover the costs of all labor, materials, plant, equipment, insurance, and incidentals required to remove the designated sign posts including accessories and deliver to the Bureau of Traffic Operations Yard, all as shown on Contract Drawings and in accordance with the specifications and directions of the Engineer. The costs shall also include repairing the sidewalk disturbed by the removal of the posts.

Payment will be made under:

Item No.	Item	Pay Unit
6.82 A	REMOVING EXISTING TRAFFIC AND STREET NAME SIGNS	S.F.
6.82 B	REMOVING EXISTING TRAFFIC AND STREET NAME SIGN POSTS	L.F.

SECTION 6.83 - Furnishing and Installing Traffic Signs and Posts

6.83.1. DESCRIPTION. Under this section, the Contractor shall be required to furnish new regulatory, informational, or directional signs, and new traffic sign posts, including all accessories; to install traffic signs and traffic sign posts, including footings, at locations as directed by the Engineer; all in accordance with the specifications, the New York City Department of Transportation's Bureau of Traffic Operations (B.T.O.) Standard Drawings and Work Orders, and directions of the Engineer.

6.83.2. MATERIALS.

(A) Signs shall be made of flat unpainted Aluminum, Alloy 6061-T6 or approved equivalent, of the thickness indicated on the appropriate Bureau of Traffic Standard Drawing. Each sign blank shall be cut from one piece of aluminum and shall be free from wind, buckle, dents, or twist, and the face shall be substantially a plane surface. All edges and corners shall be filed or ground smooth, leaving the entire blank free from sharp edges and burrs. Welded or jointed sign blanks will not be accepted. The blank shall be cut and drilled in accordance with the appropriate drawings. The distances between holes must be accurately maintained to permit interchangeability of signs on existing sign brackets or sign posts.

(B) Posts shall be of the steel rail type, furnished with a baked green alkyd resin, without anchor plates and shall be rolled from material meeting the requirements of ASTM Designation A 499.

(C) Concrete for footings shall be Class B-32, Type IIA; cement - Type II Portland; sand - Type 1A; coarse aggregate Type 1, Grade B, or Type 2, Size No. 57; and an approved air-entraining agent shall be added at the time that concrete is mixed. Concrete, cement and aggregate shall comply with the requirements of Section 3.05.

(D) All other unspecified materials shall be approved by the Engineer.

6.83.3. METHODS.

(A) PARKING SIGNS (e.g.: R7 or SP SERIES)

1. General. Parking signs shall be either Type I or Type II Signs. Type I signs shall be aluminum signs with white enamel paint and Type II signs shall be aluminum signs with white vinyl sheeting. The appropriate legends shall be silk screened on the white sign blanks.

   Each sign blank shall be thoroughly cleaned of all grease, dirt, and other foreign matter and then treated with Alodine, Bonderite 710, Bonderite 170, or an approved equivalent, in accordance with manufacturer's recommendations. After treatment, gloves shall be used in handling sign blanks until painted.

   Sign layouts shall be in accordance with the appropriate B.T.O. drawings.

2. Type I Signs.

   (a) Construction Requirements. The finished signs shall be able to withstand two years of accelerated naval weathering tests without appreciable loss of legibility or change in color, in accordance with Federal paint, varnish and lacquer Specification TP-141B on file with the inspection sampling and testing Department of U.S. Navy.

   The finished surface shall be a true color tone, free from iridescent undertones. White backgrounds that are yellowish or creamy will not be accepted. All colors must be satisfactory to the Bureau of Traffic Operations.

   The finish shall have such adhesion and elasticity that it shall not crack, chip, flake or separate from the undersurface when the sign is struck with a hammer or scratched with the point of a knife.

The finished designs shall be clear and sharp, with the lines of all details true, regular and free from waviness, unevenness or furry edges. The surface of the finished sign shall be clear of cracks, scale, pits, blisters, pin holes, runs, gaps, dirt particles, skins and blemishes of any kind.

All signs and blank signs shall be constructed in accordance with the details as shown on the Bureau of Traffic Operations Standard Drawings. In the event a particular detail or sketch is not shown, construction shall be as directed by the Bureau of Traffic Operations and the Engineer.

(b) Painting. A primer coat, at least 0.8 mil dry film thickness shall be sprayed on both sides of the treated sign blank. The paint shall be DeLux Baking Sign Primer 64-907, or approved equivalent. Baking time and temperature shall be specified by the paint manufacturer.

After the primer is thoroughly dry, a finish coat, at least 1.2 mil dry film thickness, shall be sprayed on both sides, and all edges of the sign. The paint shall be DeLux Sign Background Finish 86-805 White, or approved equivalent. Baking time and temperature shall be as specified by the paint manufacturer.

(c) Lettering & Placement of Legends. After the background is thoroughly dry, the signs shall be inscribed by means of the silk screen process with the borders and lettering indicated on the appropriate drawing.

All lettering for "Guide" type signs shall be in accordance with the Clearview fonts. All lettering for "Regulatory" and "Warning" type signs shall be in accordance with the Federal Highway Administration (FHWA) "Standard Alphabets for Traffic Control Devices". The paint shall be DeLux 24 line Baking Stencil Paste or approved equivalent, of color satisfactory to the Bureau of Traffic Operations. Baking time and temperature shall be as specified by the paint manufacturer.

The legends on signs shall be in accordance with the B.T.O. work orders to be furnished by the Engineer to the Contractor. The sign numbers with the suffix "A" shall have a right arrow on one face, and a left arrow on the other face. These signs are to be used where the regulation changes at the sign location, and the arrows are to point in the direction where the regulation is in effect. The column headed "Arrow Points" shall be used for all signs with the suffix "A" and the cardinal direction of the arrow shall be as shown in this column.

3. Type II Signs.

(a) Construction Requirements. The sign shall be weather resistant and following cleaning shall show no appreciable discoloration, cracking, crazing, blistering, or dimensional change when exposed to accelerated weathering for either 175,000 Langleys (approximately 1 year) south facing, unprotected at 45 degrees in South Florida, or 1,200 Atlas Twin arc weathering (E42-64 Type D) in accordance with ASTM D 822.

The sign surface shall be readily refurbished by cleaning and clear overcoating in accordance with the manufacturer's recommendations.

(b) Application of Vinyl Sheeting. The sheeting shall be applied to the treated sign in accordance with the manufacturer's specifications.

(c) Acceptable Brands of Vinyl Sheeting. Vinyl sheeting furnished by the following manufacturers, or approved equivalent, are acceptable for use in this contract:

Avery Dennison Reflective Films Division
65-65 West Howard Street
Niles, LI 60714

3M Company
PO Box 33225
St. Paul, Mn. 55133-3225

Nippon Carbide Industries
12981 East Florence Ave.
Santa Fe Spring, CA 90670

(d) Lettering & Placement of Legends. The signs shall be inscribed by means of the silk screen process with the borders and lettering indicated on the appropriate drawing and/or directions of the Engineer. All lettering shall be in conformance with the current edition of the FHWA "Standard Alphabets for Traffic Control Devices". The paint shall be as specified by the manufacturer of the vinyl sheeting and of a color satisfactory to the Bureau of Traffic Operations.

The legends on signs shall be in accordance with the work orders to be furnished by the Engineer. The sign numbers with suffix "A" shall have a right arrow on one face, and a left arrow on the other face. These signs are to be used where the regulation changes at the sign location and the arrows are to point in the direction where the regulation is in effect. The column headed "Arrow Points" shall be used for all signs with the suffix "A" and the cardinal direction of the arrow shall be as shown in this column.

(B) SCHOOL CROSSING SIGNS (W9-1 AND W9-2)

1. Treatment. Each sign blank shall be thoroughly cleaned of all grease, dirt, and other foreign matter and then treated by the Alodine Method, in accordance with manufacturer's recommendations. After treatment, gloves shall be used in handling sign blank until the vinyl sheeting is applied.

2. Screening. The signs shall be inscribed by means of a silk screen process on yellow vinyl sheeting. The paint shall be black, and compatible with the vinyl sheeting.

3. Sign Layout. The sign shall be laid out in accordance with Bureau of Traffic Operations Drawings SG-145, SG-146, and SG-147.

4. Application of Vinyl Sheeting. The sheeting shall be applied to the treated sign in accordance with the manufacturer's specifications.

5. Finish. The finished sign shall be clear coated with a Finishing Clear in accordance with the specifications of the manufacturer of the vinyl sheeting.

6. Acceptable Brands of Vinyl Sheeting. Vinyl sheeting furnished by the following manufacturers, or approved equivalent, are acceptable for use in this contract:

Avery Dennison Reflective Films Division
65-65 West Howard Street
Niles, LI 60714

3M Company
PO Box 33225
St. Paul, Mn. 55133-3225

Nippon Carbide Industries
12981 East Florence Ave.
Santa Fe Spring, CA 90670

7. Requirements. The sign shall be weather resistant and, following cleaning, shall show no appreciable discoloration, cracking, crazing, blistering, or dimensional change, and not less than 80% of the specified minimum brightness values when exposed to accelerated weathering for either 175,000 Langleys (approximately 1 year) south facing, unprotected at 45 degree in South Florida, or 1,200 hours Atlas Twin arc weathering (E42-64 Type D) in accordance with ASTM D 822.

The sign surface shall be readily refurbished by cleaning and clear overcoating in accordance with the manufacturer's recommendations.

(C) ALL OTHER REGULATORY & WARNING SIGNS

1. Treatment. Each sign blank shall be thoroughly cleaned of all grease, dirt, and other foreign matter and then treated by the Alodine method, in accordance with the manufacturer's recommendations. After treatment, gloves shall be used in handling the sign blank until the reflective sheeting is applied.

2. Lettering. The signs shall be inscribed by means of a silk screen process on white reflective sheeting. The paints shall be transparent red and opaque black, and shall be compatible with the reflective sheeting. The colors shall be approved by the Engineer.

All lettering shall be in conformance with the current edition of the FHWA "Standard Alphabets for Traffic Control Devices".

3. Sign Layout. The sign shall be laid out in accordance with the appropriate Bureau of Traffic Operations drawings.

4. Application of Reflective Sheeting. The sheeting shall be applied to the treated sign in accordance with the manufacturer's specifications.

5. Finish. The finished sign shall be clear coated with a Finishing Clear, unless the manufacturer of the sheeting recommends that the sign not be coated. The Finishing Clear shall be compatible with the sheeting and applied in accordance with the specifications of the manufacturer of the reflective sheeting.

6. Sheeting. Reflective sheeting shall be either Prismatic Sheeting Type III or IX, and shall conform to the Federal Highway Administration's standard specifications for construction of roads and bridges on Federal Highway Projects (FP 79).

Reflective sheeting furnished by the following manufacturers, or approved equivalent, are acceptable for use in this contract:

MANUFACTURER	PRODUCT
Avery Dennison Reflective Films Division	Engineer Grade, High Intensity, Prismatic
3M Company	Engineer Grade, High Intensity, Prismatic
Nippon Carbide Industries	Engineer Grade, High Intensity, Prismatic

7. Requirements. The sign shall be weather resistant and following cleaning shall show no appreciable discoloration, cracking, crazing, blistering, or dimensional change, and not less than 80% of the specified minimum brightness values when exposed to accelerated weathering for

either 175,000 Langleys (approximately 1 year), south facing, unprotected at 45 degree in South Florida, or 1,200 hours Atlas Twin Arc Weathering (E42-64 Type D) in accordance with ASTM D 822).

The sign surface shall be readily refurbished by cleaning and clear overcoating in accordance with the manufacturer's recommendations.

(D) DELIVERY AND PACKING OF SIGNS & POSTS

All signs and sign posts furnished, but not installed shall be delivered to the designated Bureau of Traffic Operations Sign Shop.

The signs and posts shall be packed and delivered in such manner that no injury or defacement may occur to the finished unit. Approved corrugated cardboard boxes containing not more than twelve signs shall be used for shipping, delivering and storing of signs.

The Contractor is required to deliver, unload, and stack at a site accessible to truck delivery inside the Bureau of Traffic Operation Sign Shop, as directed by the Shop Superintendent. Delivery shall be effected between the hours of 9 AM and 3 PM only, Monday thru Friday, inclusive.

(E) SAMPLING

The Contractor shall submit for approval, to the Bureau of Traffic Operations, the number and type of samples listed below, as appropriate, before commencing production. The samples shall be fabricated in accordance with the appropriate Bureau of Traffic Operations Standard drawings. The sample shall be shipped to the Bureau of Traffic Sign Shop, in the Borough of Queens, as directed by the Bureau of Traffic Operations.

Item	Quantity
Steel Rail -12 ft.	2
Elastic Stop Nut	2
Machine Bolts	2
Stainless Steel Strap 12" Long	2
Stainless Steel Strap 3" Long	2
2 Pc. Stainless Steel Bracket	2
Stainless Steel Buckle	2
Sign Post	2
Signs	2 Parking and 2 Traffic Control (Message & Type to be Selected by the Engineer.)

(F) TRAFFIC SIGN POSTS

All traffic sign posts of the steel rail type furnished shall be of a uniform, modified, flanged channel section such that the area of contact between the post and the sign is symmetrical with the vertical axis of sign and posts.

The minimum dimensions of posts shall be as follows:

Width of Flange Face	Width of Back	Depth from Face of Flange to Back
3-1/2"	1-7/8"	1-3/4"

The minimum weight of each post before holes are punched shall be 3.0 pounds per foot. There may be a weight tolerance of plus or minus 5%.

The length shall be 12'- 0" with a tolerance of plus or minus one inch.

All posts shall be punched with 3/8" diameter holes on the centerline spaced at 1" centers beginning 1" from top of post for the entire length.

The finished posts shall be machine straightened and have a smooth uniform finish free from cracks, flaws, injurious seams, laps, blisters, ragged, sharp and imperfect edges, or other defects affecting strength, durability, or appearance. Bolt holes of the diameter specified shall be accurately spaced vertically and centered horizontally, so that the holes will register for back to back application. All holes and sheared ends shall be free from burrs.

All posts shall be painted with a weather-resistant, rust-inhibitive, high-quality, dark green enamel, which shall produce hard, mar-resistant coating, free from paint cracks, blisters or other defects. Before painting, all posts shall be thoroughly cleaned of all dirt, rust, loose scale, oil or grease. The quality of the paint and prior preparation shall be such that when the finished post is struck a light blow with a sharp tool, the paint shall not crack or chip, and if scratched with a knife, shall not powder. The minimum thickness of the dry film enamel shall be one mil. It shall pass a standard 100 hour salt spray test (20% solution by spray or fog at 70 degrees). Painting shall be the final process after fabrication and punching has been completed.

(G) INSTALLATION OF TRAFFIC SIGNS

1. General. All signage in each block shall be installed within fourteen (14) calendar days of completion of final pavement within that block. Failure to meet this requirement shall be deemed a substantial deficiency in compliance with the specification requirements of **Subsection 6.70.12**, and will be cause for assessment of liquidated damages stipulated therein.

   The erection of a sign shall include all work necessary to secure the sign to the sign post, lamppost, traffic signal posts, or traffic signal mast arms, including the furnishing and installation of clamps, brackets, and all necessary appurtenances and the attachment of the sign in the prescribed location and alignment, as indicated on the Contract Drawings, Bureau of Traffic Operations Work Orders and Standard Drawings, or as directed by the Engineer.

   Where the Contractor is required to install signs other than those to be furnished by him, the Bureau of Traffic will furnish to the Contractor the appropriate signs. These signs shall be made available to the Contractor at the designated Bureau of Traffic Operation's Sign Shop.

2. Parking Sign Installation. The installation of parking signs shall include all work necessary to secure the signs in the prescribed positions on the supporting posts. The most restrictive regulation sign shall be mounted on the top, with top of sign 10' above the sidewalk or as directed by the Engineer. The proper stacking of signs will be shown on each Work Order by listing the signs at each installation in order with the top sign first, and each additional sign below in proper sequence.

   The traffic signs shall be mounted on "EL" columns, street light posts, traffic signal posts, or sign posts of the steel rail type in accordance with the locations and types as shown on Contract Drawings, B.T.O.'s Work Orders, or as directed by the Engineer.

   For signs mounted on "EL" columns, street light posts, or traffic signal posts, a two-piece bracket of aluminum fabricated in accordance with Bureau of Traffic Operations Standard Dwg. No. SG-22, and fastened with stainless steel strapping, as shown on Bureau of Traffic Operations Standard Dwg. SG-30, shall be used.

   For signs mounted on post of the steel rail type, cadmium-plated 5/16"-18NC 2" x 3/4" hexhead, 1/2" across flats and elastic stop nuts cadmium-plated 5/16"-18T 9/16" across flats shall be used. Two machine bolts and nuts shall be used for each sign in accordance with B.T.O.'s Standard Dwg.'s SG-104 and SG-105.

All signs shall be installed in such a manner that the sign faces are plumb, and at 45 degree angle with the curb facing the direction of traffic with the top of sign to be 10'- 0" high or as directed by the Engineer.

3. School Crossing Signs. Installation of School Crossing sign on a sign post of the steel rail type comprises the installation of the appropriate sign in accordance with Bureau of Traffic Operations Drawing No. SD-225B.

   Installation of a School Crossing sign on a lamppost or traffic signal post comprises the installation of the appropriate sign on a lamppost or traffic signal post in accordance with Bureau of Traffic Operations Drawing No. SD-225B.

4. All Other Regulatory & Warning Signs. Installation of a sign on a sign post of the steel rail type comprises the installation of the appropriate sign in accordance with Bureau of Traffic Operations Drawing No. SD-225B.

   Installation of a sign on a lamppost or traffic signal post comprises the installation of the appropriate sign on a lamppost or Traffic Signal Post in accordance with Bureau of Traffic Operations Drawing No. SD-225B.

   Installation of a sign on a traffic signal mast arm comprises the installation of the appropriate sign, including the drilling of any necessary holes in the sign blank, on a traffic signal mast arm, in accordance with Bureau of Traffic Operations Drawing SD-225D, using a unibrace adjustable, self leveling overhead sign bracket, as manufactured by Lyle Signs, Inc., "Model MFS", or an approved equivalent.

(H) INSTALLATION OF TRAFFIC SIGN POSTS

1. General. The work to be done shall be the installation of traffic sign posts of the steel rail type only. The posts shall be installed in new sidewalk, existing sidewalk, or earth. The work shall include excavation, backfilling, the restoration of the sidewalk, and the placement of concrete footing for the posts.

2. Installation Method. The installation of steel rail type sign posts shall be done in accordance with the details shown on the appropriate Bureau of Traffic Operations Standard Drawings Nos. SG-104, SG-105, SG-104B, or SG-105B. The Contractor may elect to set the sign post in concrete foundation as shown on the Standard Drawings, as modified by the Engineer.

   For parking regulatory sign posts, the installation shall be in accordance with B.T.O. Drawing Nos. SG-104 or SG-105, and as directed by the Engineer. The sign posts shall be plumb and the vertical plane of the back of the sign posts shall be at 45° angle to the curb line facing the direction of the traffic.

   For all other type regulatory and warning sign posts, the installation shall be in accordance with B.T.O. drawing Nos. SG-104B or SG-105B, and as directed by the Engineer.

3. Concrete Footing for Posts. The Contractor shall cut a neat hole in the sidewalk or earth, and excavate to the required depth, then pour the concrete and install the sign post in the fresh concrete, as shown on the B.T.O. Standard Drawings. Where the sidewalk is made of brick paver, the concrete footings shall be poured prior to installation of the brick paver sidewalk. The concrete mix and placement shall meet the requirements of Section 3.05 and 4.06 respectively. The exposed surface shall be troweled to a neat, smooth finish, sloped to provide drainage away from the post.

   The Contractor shall dispose of all unused fill and other materials, leaving the site in a clean and neat condition. He shall also restore sidewalk areas which have been disturbed, in a neat and workmanlike manner, to the satisfaction of the Engineer.

To protect the restored sidewalk areas from mutilation, the Contractor shall use a temporary protective disc of cardboard, of sheetmetal, or other satisfactory method, and remove same when concrete is cured as determined by the Engineer.

6.83.4. MEASUREMENT. The quantity to be measured for payment for each of the items is as follows:

Number of square feet of new non-reflectorized traffic signs (Type I or Type II) furnished.
Number of square feet of new reflectorized traffic signs furnished.
Number of square feet of traffic signs installed.
Number of linear feet of new traffic sign posts furnished.
Number of linear feet of traffic sign posts installed.

6.83.5. PRICES TO COVER. The contract prices per square foot of new non-reflectorized traffic signs (Type I or Type II) furnished and new reflectorized traffic signs furnished shall cover the costs of all labor, materials, plant, equipment, insurance, and incidentals necessary to fabricate the signs, including painting, sheeting, lettering, placement of legends, packing and delivering extra signs to designated Bureau of Traffic Operations Sign Shop, and to provide samples to Bureau of Traffic Operations for approval, all as shown on contract documents and in accordance with the specifications and directions of the Engineer.

The contract price per square foot of traffic signs installed shall cover the costs of all labor, materials, plant, equipment, and incidentals necessary to mount the signs on supporting posts (EL columns, street light poles, traffic light posts and mast arms, and sign posts of the steel rail type) at locations as directed and in accordance with the specifications and directions of the Engineer. The costs shall also include the supplying and sampling of bolts, nuts, clamps, brackets, and all necessary appurtenances as required and, where applicable, picking up signs furnished by the Bureau of Traffic Operations at their designated Sign Shop.

The contract price per linear foot of new steel rail type traffic sign posts furnished shall cover the costs of all labor, materials, plant, equipment, and incidentals necessary to fabricate the posts and to deliver the posts to locations designated by Bureau of Traffic Operations, all as shown on contract documents and in accordance with the specifications and directions of the Engineer. The cost shall also include samples and extra posts required to be delivered to designated Bureau of Traffic Operations Sign Shops.

The contract price per linear foot of steel rail type traffic sign posts installed shall cover the costs of all labor, materials, plant, equipment, and incidentals necessary to install the post on sidewalk or earth, to excavate and backfill for footing, to place the concrete footing and to restore all disturbed areas, all as shown on contract documents, and in accordance with the specifications and directions of the Engineer.

Payment will be made under:

Item No.	Item	Pay Unit
6.83 AA	FURNISHING NEW NON-REFLECTORIZED TRAFFIC SIGNS	S.F.
6.83 AR	FURNISHING NEW REFLECTORIZED TRAFFIC SIGNS	S.F.
6.83 BA	INSTALLING TRAFFIC SIGNS	S.F.
6.83 AB	FURNISHING NEW TRAFFIC SIGN POSTS	L.F.
6.83 BB	INSTALLING TRAFFIC SIGN POSTS	L.F.

SECTION 6.84 – Lollipop Type Bus Stop Signs

6.84.1. DESCRIPTION. Under this item, the Contractor shall be required to pay New York City Department of Transportation (NYCDOT) for them to remove, store, and reinstall existing "lollipop" type bus stop signs and/or remove existing bus stop signs and furnish and install new "lollipop" type bus stop signs, as may be required, during construction under this project. Payment for said work shall be made to NYCDOT at least thirty (30) calendar days prior to any removal or installation of "lollipop" type bus stop signs.

6.84.2. MATERIALS. (Not applicable)

6.84.3. CONSTRUCTION DETAILS. At least thirty (30) calendar days prior to the date of any required diversion of buses, the Contractor shall be required to: 1) contact the General Superintendent, Special Operations, NYC Transit, 2 Broadway, Room B17.123, Telephone Number (646) 252-5526, to arrange for diversion of buses; 2) make arrangements with the NYCDOT's Bus Stop Management Division, Telephone Number (718) 894-2785, to have them remove, store and reinstall their existing "lollipop" type bus stop signs and/or remove existing bus stop signs and furnish and install new "lollipop" type bus stop signs, as may be required; and, 3) to pay NYCDOT their fee to remove, store and reinstall or furnish and install new "lollipop" type bus stop signs, as may be required.

6.84.4. METHOD OF MEASUREMENT. The fixed price lump sum shown in the Bid Schedule for this item shall be included in the total bid price; however, actual payment to the Contractor will be based on the actual billing cost submitted by NYCDOT to the Contractor for payment. The fixed sum is not to be altered in any manner by the bidder.

It is agreed that all work shall be based on the actual number of Bus Stop signs that are removed and installed.

6.84.5. BASIS OF PAYMENT. The Contract price for this item shall be the total price for the work performed by NYCDOT under this item. Payment shall be equal to the sum total of all vouches submitted to the Contractor by NYCDOT, as approved by the Engineer, for payments made by the Contractor to NYCDOT for the cost to remove, store, and re-install existing "lollipop" type bus stop signs and/or remove existing bus stop signs and furnish and install new "lollipop" type bus stop signs.

Payment under this item shall be made by the City on a reimbursement basis only, for payments made by the Contractor to the NYCDOT for providing the materials and services required to remove, store, and re-install existing "lollipop" type bus stop signs and/or remove existing bus stop signs and furnish and install new "lollipop" type bus stop signs, as required. Said payments shall be equal the total amount of invoices submitted by the NYCDOT to the Contractor during the period for which a requisition is submitted. The Contactor shall be required to submit to the Engineer satisfactory evidence of payment to NYCDOT. No retainage will be withheld by the Department on such payments made under this section.

The total estimated cost of this item is the "fixed sum" amount shown for this item in the Bid Schedule. No guarantee is given that the actual lump sum cost for this item will in fact be the "fixed sum" amount. The "fixed sum" amount is included in the total bid solely to insure that sufficient monies will be available to pay the Contractor for the work performed under this item.

The Contractor shall maintain separate books of accounts and shall not charge any portion of the cost for removing, storing, reinstalling and/or furnishing new lollipop type bus stop signs to another part of the work. Payment and partial payments under this item shall be treated separately from the rest of the contract items.

The voucher for payment shall be submitted to the Engineer on a monthly basis.

The "fixed sum" is for bidding purposes only and shall not be varied in the bid. The Contractor will be paid for the actual amount regardless of the fixed sum, which may be more or less than the fixed amount.

Payment will be made under:

Item No.	Item	Pay Unit
6.84 B	LOLLIPOP TYPE BUS STOP SIGNS	F.S.

SECTION 6.85 - Traffic Enforcement Agents

6.85.1. DESCRIPTION. Under this item, professionally trained NYC Traffic Enforcement Agents (TEAs) from the Police Department shall be provided in order to properly maintain the flow of traffic in the vicinity of the construction site, as specified in the contract documents and as ordered by the Engineer.

6.85.2. MATERIALS. The Contractor shall arrange for TEAs to be provided by the New York City Police Department (NYPD) with a uniform readily identifiable to the traveling public. It is understood that the Contractor is not responsible for providing the "professionally trained" agents. Each TEA will be equipped with all items necessary to carry out their assigned duties. Bookkeepers assigned to the Police Department will provide administrative support related to the reimbursement procedure for the NYPD for the duration of the project in processing the TEA timesheets.

6.85.3. CONSTRUCTION DETAILS. The TEAs will be deployed to provide adequate traffic control throughout the construction site. The location, hours and days to be worked by the TEAs shall be jointly evaluated and determined by the Resident Engineer and the Office of Construction Mitigation and Coordination, Streets (OCMC) before the start of the contract and reevaluated with modifications made if necessary at regular meetings. Emergency situations, as determined by the New York City Department of Transportation (NYCDOT) Commissioner or a designee, may be cause for deviation from the previously determined TEA locations, hours or days.

Each TEA will be required on a daily basis to sign a time sheet prepared by NYCPD showing date, time and the hours worked at each assigned location. These time sheets along with the report which shall contain the name of the agent, badge number and in-out time will be submitted to the Engineer, on a monthly basis, for his verification.

6.85.4. METHOD OF MEASUREMENT. The fixed price lump sum shown in the bid proposal for this item shall be considered the price bid, although actual payment will be based on the work performed. The fixed sum is not to be altered in any manner by the bidder.

It is agreed that all work shall be based on the actual number of hours that each TEA performs at a post in addition to travel time. Travel time will not exceed two hours per day. Furthermore, it is understood that the total estimated costs shall include a fringe/leave allowance equal to no more than 60% of the hours worked by the TEAs, supervisory personnel and administrative personnel (bookkeepers).

For every four (4) TEAs on duty there shall be one (1) relief TEA. Relief TEAs are required to provide coverage for regularly posted TEAs during lunch or dinner period and breaks. They shall be paid at the same rate as the agents they are relieving that day.

The hours for supervisory personnel will be based on a percentage basis of man-hours worked by TEAs including travel time. Supervison will consist of level I, level II, and level III supervisors. Payment for the supervisory personnel will be made based on work as follows: level I at 12.50%, level II at 2.50%, and level III at 1.33% of all hours worked by TEAs. Supervisory personnel hours are not subject to audit.

Bookkeeper reimbursements will be based on the percentage of time spent preparing time sheets for the duration of the project. This will not exceed 5% of the TEA agreement and will not be subject to audit.

The hourly rate paid shall be the TEA's actual yearly salary, including uniform allowance, divided by the number of normal hours paid per year, including leave and holiday hours for TEAs, Bookkeepers and all levels of supervision. Those TEAs, Bookkeepers and supervisors working overtime, including weekends and holidays, will be paid one and one-half (1-1/2) times their regular hourly rate. In addition, those TEAs, Bookkeepers and supervisors starting work prior to 8:00 AM and/or working beyond 6:00 PM shall be entitled to a 10% night shift differential.

6.85.5. BASIS OF PAYMENT. The Contract price for this item shall be a lump sum price for the work performed under this item and shall be equal to the sum total of all vouchers submitted to the Contractor by the New York City Police Department (NYCPD), as approved by the Engineer, for payment by the Contractor for the cost incurred, in providing the services of TEAs, Bookkeepers and supervisors.

Payment under this item shall be made by the City on a reimbursement basis only for payments made by the Contractor to the NYCPD for providing the services of TEAs, Bookkeepers and supervisors and shall equal the total amount of invoices submitted by the NYCPD and paid by the Contractor during the period for which a requisition is submitted. The Contactor shall be required to submit to the Engineer satisfactory evidence of payment for all TEA, Bookkeeper and supervisor services being requisitioned. No retainage will be withheld by the Department on such payments made under this section.

The total estimated cost of this item is the “fixed sum” amount shown for this item in the Bid Schedule. No guarantee is given that the actual lump sum cost for this item will in fact be the “fixed sum” amount. The “fixed sum” amount is included in the total bid solely to insure that sufficient monies will be available to pay the Contractor for these services.

The Contractor shall maintain separate books of accounts and shall not charge any portion of the cost of Traffic Enforcement Services to another part of the work. Payment and partial payments under this item shall be treated separately from the rest of the contract items.

The voucher for payment shall be submitted to the Engineer on a monthly basis and shall include the signed copies of the daily report.

The “fixed sum” is for bidding purposes only and shall not be varied in the bid. The Contractor will be paid for the actual amount regardless of the fixed sum, which may be more or less than the fixed amount.

Payment will be made under:

Item No.	Item	Pay Unit
6.85 A	TRAFFIC ENFORCEMENT AGENTS	F.S.

SECTION 6.86 - Furnishing and Installing Street Name Signs and Posts

6.86.1. DESCRIPTION. Under this section, the Contractor shall be required to furnish new street name signs, and new street name sign posts, including all accessories; to install street name signs and street name sign posts, including footings, at locations as directed; all in accordance with the specifications, the New York City Department of Transportation’s Bureau of Traffic Operations (B.T.O.) Standard Drawings and Work Orders, and directions of the Engineer.

6.86.2. MATERIALS.

(A) Sign blanks for Type II street name signs shall be made of flat unpainted aluminum, Alloy 6061-T6 or approved equivalent. Each sign blank shall be cut from one piece of aluminum and shall be free from wind, buckle, dents, or twist, and the face shall be substantially a plane surface. All edges and corners shall be filed or ground smooth, leaving the entire blank free from sharp edges and burrs. Welded or jointed sign blanks will not be accepted. The blank shall be cut and drilled in accordance with Bureau of Traffic Operations Drawing SG-123B. Sign blanks shall be 9-1/2 inches wide, furnished in lengths of 24, 30, 36 and 42 inches, and shall be 0.080 inches thick. The distances between holes must be accurately maintained to permit interchangeability of signs on existing sign brackets or sign posts.

(B) Sign posts shall be 2-1/2" inside diameter, 2-7/8" outside diameter steel pipe, 14 feet long. A force fit cast iron pipe end closure shall be installed at one end. The cost of the enclosure shall be included in the cost of the pipe. The pipe and pipe end closure shall be galvanized in accordance with ASTM Designation A 123, and conform with B.T.O. Drawing SG-125A.

Concrete for footings shall be Class B-32, Type IIA; cement - Type II Portland; sand - Type 1A; coarse aggregate Type 1, Grade B, or Type 2, Size No. 57; and an approved air-entraining agent shall be added at the time that concrete is mixed. Concrete, cement and aggregate shall comply with the requirements of Section 3.05.

All other unspecified materials shall be approved by the Engineer.

6.86.3. METHODS.

(A) TREATMENT

Each sign blank shall be thoroughly cleaned of all grease, dirt, and other foreign matter and then treated with Alodine, or an approved equivalent, in accordance with the manufacturer's recommendations. After treatment, clean gloves shall be used in handling sign blanks until the reflective sheeting is applied.

Sign layouts shall be in accordance with the appropriate B.T.O. Drawings.

(B) LETTERING

The street name shall be reversed silk screened on reflective sheeting, using transparent paint compatible with the sheeting, and of the colors conforming to that specified by the Bureau of Traffic Operations.

The Contractor may apply reflective sheeting cut out letters on reflective sheeting.

All lettering shall be in accordance with the Clearview fonts.

(C) SIGN LAYOUT

The street name sign shall be laid out using the following rules:

1. All suffixes as st, rd, th and nd after numbered streets shall be omitted.

2. Cardinal directions used as prefixes shall be abbreviated as directed by the Bureau of Traffic Operations. Cardinal directions used as a suffix shall not be abbreviated, unless authorized by the Engineer.

3. <u>24" and 30" signs</u>. The Street Name is to be 6" Capital Letters, Clearview Series 1-W, 2-W or 3-W, as indicated on B.T.O. Dwg. SG-124. Street, Avenue, Place, etc., shall be abbreviated as listed in Article D, below, in 3" Capital Letters, Clearview Series 3-W, aligned with the top of the

street name. The sign is to be laid out using the largest possible letter series, and conform with B.T.O. Drawing No. SG-124.

4. 36" Sign. The Street Name is to be 6" Capital Letters, Clearview Series 1-W, 2-W or 3-W, as indicated on B.T.O. Dwg. SG-124. Street, Avenue, Place, etc., shall be abbreviated as listed in Article D, below, in 3" Capital Letters, Clearview Series 3-W, aligned with the top of the street name.

If the legend cannot be accommodated within the designated area in 6" letters on a 42" sign, the street name shall be reduced to 4" Capital Letters, Clearview Series 1-W, 2-W or 3-W, and Street, Avenue, Place, etc., shall be placed below in 2" Capital Letters, Cleaview Series 3-W. Street, Avenue, Place, etc., shall not be abbreviated when on second line, unless authorized by the Engineer. The sign is to be laid out using the largest possible letter height and series, and conform with B.T.O. Drawing SG-124.

(D) STANDARD ABBREVIATIONS

	NAME	ABBREVIATION	
	AVENUE	AV	
*	AVENUE	AVE	* Ave shall be used for streets where prefix is Avenue, i.e. Ave B
	BOULEVARD	BLVD	
	COURT	CT	
	DRIVE	DR	
	CRESCENT	CRES	
	EXPRESSWAY	EXPWY	
	HIGHWAY	HWY	
	LANE	LA	
	PLACE	PL	
	PARKWAY	PKWY	
	ROAD	RD	
	TERRACE	TERR	
	TURNPIKE	TPKE	
	STREET	ST	
	SQUARE	SQ	
	NORTH	N	
	SOUTH	S	
	EAST	E	
	WEST	W	

Words not listed above shall not be abbreviated without written permission of the Engineer. The period after the abbreviation shall be omitted.

(E) APPLICATION OF REFLECTIVE SHEETING

The reflective sheeting shall be applied in accordance with the specifications of the manufacturer, in a neat, workmanlike manner. Signs with air pockets, wrinkling, or other defects will not be accepted.

(F) FINISH

The finished sign shall be clear coated, using a Finishing Clear, compatible with the sheeting, and applied in accordance with the manufacturer's specifications.

(G) SHEETING

Reflective sheeting shall conform to the Federal Highway Administration's standard specifications for construction of roads and bridges on Federal Highway Projects.

Reflective sheeting furnished by the following manufacturers, or approved equivalent, are acceptable for use in this contract:

MANUFACTURER	PRODUCT
Avery Dennison Reflective Films Division	Engineer Grade, High Intensity, Prismatic
3M Company	Engineer Grade, High Intensity, Prismatic
Nippon Carbide Industries	Engineer Grade, High Intensity, Prismatic

(H) REQUIREMENTS

The sign shall be weather resistant and following cleaning shall show no appreciable discoloration, cracking, crazing, blistering, or dimensional change, and not less than 80% of the specified minimum brightness values when exposed to accelerated weathering for either 175,000 Langleys (approximately 1 year), south facing, unprotected at 45 degree in South Florida, or 1,200 hours Atlas Twin Arc Weathering (E42-64 Type D) in accordance with ASTM D 822.

The sign surface shall be readily refurbished by cleaning and clear overcoating in accordance with the manufacturer's recommendations.

(I) STREET NAME SIGN POSTS

The Contractor shall furnish sign posts in accordance with B.T.O. Drawing SG-125A.

(J) INSTALLATION OF STREET NAME SIGNS

1. General. All signage in each block shall be installed within fourteen (14) calendar days of completion of final pavement within that block. Failure to meet this requirement shall be deemed a substantial deficiency in compliance with the requirements of **Subsection 6.70.12**, and will be cause for assessment of liquidated damages stipulated therein.

   The Contractor shall perform all necessary work to secure street name signs in the prescribed position on the supports, specified on the work order, and as indicated on B.T.O. Drawings SG-123A, SG-123B, and SG-125A, including: the attachment of the sign to the sign brackets; the installation of clamps and brackets; the attachment of the sign to the supports; any work necessary to locate the sign in the prescribed location; the furnishing of sign brackets, bolts, nuts, strapping and any other appurtenances, except filler blocks. Filler blocks will be furnished by the Bureau of Traffic Operations.

   Where the Contractor is required to install signs other than those to be furnished by him, the Bureau of Traffic will furnish to the Contractor the appropriate signs. These signs shall be made available to the Contractor at the designated Bureau of Traffic Operation's Sign Shop and may be either or both Type I and Type II Street Name signs.

2. Type I Street Name Signs. The cross-section shall be similar to Alcoa Section 83779 Type A, and conform to B.T.O. Drawing No. SG-123A.

   Type I Street Name sign bracket shall be extruded Aluminum Alloy 6062-T6.

   The bracket cross-section shall be Alcoa Aluminum 74845 Type A, or approved equivalent, and conform to B.T.O. Drawing SG-123A.

   Two (2) shims 1-1/2" x 7/8" Aluminum Alloy 6063 or 6061, 0.0875" thick (US Standard Sheet metal gage #14 Nominal 0.0781") are required for each Type I sign installation. Holes in the shims shall be as indicated on B.T.O. Drawing SG-123A.

Three (3) aluminum bolts with self locking nuts and washers are required for each Type I sign installation as indicated on B.T.O. Drawing SG-123A.

3. Type II Street Name Signs. Type II Street Name sign bracket shall be a Stainless Steel Type 304, Universal Cantilever bracket, with a Double "T" Aluminum Alloy 6061-T6 extruded section riveted to the brackets as manufactured by Signfix of North America, Inc. (Item #SF-30 CA, 30 inches long, and #SF-42CA, 42 inches long), or approved equivalent, as indicated on B.T.O. Drawing SG-123B.

   Two (2) sign brackets are required for each Type II sign installation.

   Pop rivets, as specified on B.T.O. Drawing SG-123B are required to attach the sign blank to the sign bracket.

(K) INSTALLATION OF STREET NAME SIGN POSTS

The work to be done shall be the installation of street name sign posts, including excavation, backfilling, the restoration of the sidewalk, and the placement of concrete footing for the posts, in accordance with B.T.O. Drawings SG-125A and SG-127, and the following specifications.

The Contractor shall cut a neat hole in the sidewalk or earth, and excavate to the required depth, then pour the concrete and install the sign post in the fresh concrete, as shown on the B.T.O. Standard Drawing. Where the sidewalk is made of brick paver, the concrete footing shall be poured prior to installation of the brick paver sidewalk. The concrete mix and placement shall meet the requirements of Section 3.05 and 4.06 respectively. The exposed surface shall be troweled to a neat, smooth finish, sloped to provide drainage away from the post.

The Contractor shall dispose of all unused fill and other materials, leaving the site in a clean and neat condition. He shall also restore sidewalk areas which have been disturbed, in a neat and workmanlike manner, to the satisfaction of the Engineer.

To protect the restored sidewalk areas from mutilation, the Contractor shall use a temporary protective disc of cardboard, of sheet metal, or other satisfactory method, and remove same when concrete is cured as determined by the Engineer.

(L) SAMPLING

The Contractor shall submit for approval, before commencing production, to the Bureau of Traffic Operations, the number and type of samples listed below, as appropriate. The samples shall be shipped to the Division of Highway Control, at the Bureau of Traffic Operations Main Office, 28-11 Queens Plaza North, Long Island City, N.Y. 11101, 7th Floor.

ITEM	QUANTITY
Type I Bracket, Shims for Type I Bracket	2 Sets
Nuts & Bolts for Type I Bracket	8 Sets
Type II Bracket	2 Sets
Rivets for Type II Bracket	20
Stainless Steel Strapping, 12" Length	2
Buckles for Strapping	2
Sign Post	2
Cast Iron Pipe End Closure	2
Signs	2 (Message & Type to be Selected by the Engineer.)

6.86.4. MEASUREMENT. The quantity to be measured for payment for each of the items is as follows:

Number of square feet of new reflectorized street name signs furnished.
Number of square feet of street name signs installed.
Number of linear feet of new street name sign posts furnished.
Number of linear feet of street name sign posts installed.

6.86.5. PRICES TO COVER. The contract prices per square foot of new reflectorized street name signs furnished, shall cover the costs of all labor, materials, plant, equipment, insurance, and incidentals necessary to fabricate the signs, including painting, sheeting, lettering, placement of legends, and to provide samples to Bureau of Traffic Operations for approval, all as shown on contract documents and in accordance with the specifications and directions of the Engineer.

The contract price per square foot of street name signs installed shall cover the costs of all labor, materials, plant, equipment, and incidentals necessary to mount the signs on supporting posts (EL columns, street light poles, traffic light posts and sign posts of the steel pipe type) at locations as directed and in accordance with the specifications and direction of the Engineer. The costs shall also include the supplying and sampling of bolts, nuts, clamps, brackets, and all necessary appurtenances as required and, where applicable, picking up signs furnished by the Bureau of Traffic Operations at their designated Sign Shop.

The contract price per linear foot of new steel pipe type street name sign posts furnished shall cover the costs of all labor, materials, plant, equipment, and incidentals necessary to fabricate the posts and to deliver the posts to locations designated by Bureau of Traffic Operations, all as shown on contract documents and in accordance with the specifications and directions of the Engineer. The cost shall also include samples required to be delivered to a designated Bureau of Traffic Operations Sign Shops.

The contract price per linear foot of steel pipe type street name sign posts installed shall cover the costs of all labor, materials, plant, equipment, and incidentals necessary to install the posts on sidewalk or earth, to excavate and backfill for footing, to place the concrete footing and to restore all disturbed areas, all as shown on contract documents, and in accordance with the specifications and directions of the Engineer.

Payment will be made under:

Item No.	Item	Pay Unit
6.86 AA	FURNISHING NEW STREET NAME SIGNS	S.F.
6.86 BA	INSTALLING STREET NAME SIGNS	S.F.
6.86 AB	FURNISHING NEW STREET NAME SIGN POSTS	L.F.
6.86 BB	INSTALLING STREET NAME SIGN POSTS	L.F.

SECTION 6.87 - Plastic Barrels

6.87.1. INTENT. This section describes the work of furnishing and installing Plastic Barrels for the purpose of traffic lane delineation during construction.

6.87.2. DESCRIPTION. The work shall include the furnishing and installing of plastic barrels, sand ballast, and flashers (for every fourth barrel). The barrels are to be placed as indicated on the Contract Drawings and as directed by the Engineer. The barrels shall be maintained and replaced as required during the various stages of construction.

6.87.3. MATERIALS. Barrels and flashers shall be in accordance with New York City Department of Transportation's Standard Details of Construction Standard Drawing H-1049.

6.87.4. METHODS. The barrels shall be placed in a straight line ten (10') feet apart, within the work area, unless otherwise shown on the Contract Drawings or directed by the Engineer. A flashing light shall be affixed to every fourth barrel. The barrels shall be stabilized with sand bags or approved rubber collars

At the completion of the work or when directed by the Engineer, the plastic barrels shall be removed and disposed of away from the work site.

6.87.5. MEASUREMENT. The quantity to be measured for payment shall be the actual number of plastic barrels placed in the work.

Payment will be made only for the initial installation at any location. Whenever barrels are moved to a new location, as required by the Contract Drawings or directed by the Engineer, payment will be made in the same manner as if it were an initial installation. Minor movement of the barrels from one side of the roadway to the other side, or rearrangement within a work area will not be considered as a movement to a new location and will not entitle the Contractor to additional payment.

No payment will be made for movements of barrels made for the Contractor's convenience; for movement of barrels at a given location at the end of a work period and subsequent replacement at the same location at the beginning of the next work period; for movement of barrels at a given location during a work period and subsequent replacement at the same location during the same work period; or for the interchanging of barrels between initial installations.

6.87.6. PRICE TO COVER. The contract price bid for each plastic barrel shall cover the cost of furnishing all labor, materials, plant, equipment, insurance, and necessary incidentals required and completing the work in accordance with the Contract Drawings, the specifications and the directions of the Engineer.

Where there is no scheduled item for Plastic Barrels, the cost of furnishing, installation, maintenance, relocation, and subsequent removal of Plastic Barrels as required shall be deemed included in the unit price bid for the Maintenance and Protection of Traffic item.

Payment will be made under

Item No.	Item	Pay Unit
6.87	PLASTIC BARRELS	EACH

SECTIONS 6.88 THROUGH 6.90 (VACANT)

SECTION 6.91 - Reflective Cracking Membrane (18" Wide)

6.91.1. DESCRIPTION. Under this section, the Contractor shall furnish and install a membrane over the joints of new concrete base as shown on New York City Department of Transportation's Standard Details of Construction Standard Drawings H-1034 and H-1040, prior to the placement thereon of asphaltic concrete overlay in order to inhibit reflective cracking from the pavement to the overlay. The

membrane shall be installed where required, in accordance with the specifications and the directions of the Engineer.

6.91.2. MATERIALS. The membrane shall be a pavements fabric system at least eighteen (18") inches wide. The following types, or approved equivalents, are acceptable:

Type	Manufacturer	Product
Glass fiber woven fabric, primer, and binder system	Owens-Corning Fiberglas Corp., Granville, Ohio 43023	Roadglas reinforcement, Roadbond X-100 primer, and Roadbond binder
Non-woven polypropylene fabric precoated with a rubberized adhesive base	Phillips Fibers Corp., Engineered Products Marketing, P.O. Box 66, Greenville, S.C. 29602	Petrotac
	W.R. Grace & Co. Construction Products Div. Cambridge, Mass. 02140	Bituthene S-5300

6.91.3. METHODS. The surface on which the membrane is to be placed shall be dry and free from dust, dirt, mud, oil, grease, vegetation and other contaminants.

All joints greater than one-eight (1/8) inch wide shall be cleaned by pneumatic means and filled with Asphaltic Cement (A.C.) filler, as directed by the Engineer.

The membrane shall be placed over the joints in strict accordance with the manufacturer's instructions and the Standard Drawings. Roll ends shall be overlapped four (4) to six (6) inches.

Placement of the asphaltic concrete overlay shall closely follow membrane laydown. No more membrane than can be overlaid on the same working day shall be placed.

6.91.4. MEASUREMENT. The quantity of Reflective Cracking Membrane to be measured for payment shall be the number of linear feet of membrane, eighteen (18) inches wide, actually and satisfactorily installed, excluding overlaps.

6.91.5. PRICE TO COVER. The unit price bid per linear foot for this item shall include the cost of furnishing all labor, materials, plant, equipment, insurance, and incidentals necessary to complete the work, including the cost of preparing the surface upon which the membrane is placed, all in accordance with the specifications and the directions of the Engineer.

Payment will be made under:

Item No.	Item	Pay Unit
6.91	REFLECTIVE CRACKING MEMBRANE (18" Wide)	L.F.

SECTIONS 6.92 THRU 6.93 (VACANT)

SECTION 6.94 - Cast Iron Under-Sidewalk Drains

6.94.1. INTENT. This section describes the work of constructing new cast iron under-sidewalk drains from existing roof drains to curb face.

6.94.2. DESCRIPTION. New cast iron under-sidewalk drains shall be furnished and installed at the locations as shown on the Contract Drawings and in accordance with the Contract Drawings, the specifications and the directions of the Engineer.

6.94.3. MATERIALS. All cast iron pipes and fittings shall comply with **Section 2.03, "CAST IRON PIPE"**, of the Department of Design and Construction, Division of Infrastructure, Standard Sewer Specifications.

Cast iron pipes shall be four (4") inches in diameter without hubs. Fittings shall be as required to connect pipes to existing roof drain.

Wire fabric shall comply with **Section 2.25**.

Concrete shall comply with **Section 4.06**.

Expansion Joint shall comply with **Section 2.15, Type IV**.

6.94.4. METHODS. Installation of under-sidewalk drains shall comply with the Department's Standard Details of Construction for Highways H-1037, or as otherwise shown on the Contract Drawings.

The cast iron pipes shall be cut to the lengths required, installed in the locations, and laid true to the lines and grades, all as shown on the Contract Drawings or ordered by the Engineer.

Holes required for the cast iron pipe shall be cut in the face of the curb steel facing at the locations shown on the Contract Drawings.

Connections to existing roof drains shall be made as required by existing field conditions and as directed by the Engineer.

After the installation of the cast iron pipe, the pipe end that protrudes the new curb face shall be cut flush with the curb face and ground smooth.

Prior to the placement of concrete for cradle and sidewalk, the drain pipe shall be secured in place and all connections shall be tested for water drainage and leaks.

6.94.5. MEASUREMENT. The quantity to be measured for payment shall be the number of linear feet of cast iron under-sidewalk drains placed in the completed work.

6.94.6. PRICE TO COVER. The contract price per linear foot of cast iron under-sidewalk drains shall cover the cost of all labor, materials, plant, equipment, insurance, and incidentals necessary to furnish and install cast iron under-sidewalk drains, complete with connections, concrete and wire fabric, all in accordance with the Contract Drawings, the specifications and the directions of the Engineer.

Payment will be made under:

Item No.	Item	Pay Unit
6.94	CAST IRON UNDER-SIDEWALK DRAINS	L.F.

SECTION 6.95 - Stabilization of Subgrade

6.95.1. INTENT. This section describes the work of treating existing in place subgrade soil with cement or lime to stabilize the subgrade prior to paving.

6.95.2. DESCRIPTION. Under this section, the Contractor shall be required to stabilize the subgrade at locations indicated on the Contract Drawings or where directed by the Engineer. Stabilized subgrade shall consist of in-place subgrade soil for a depth of six (6") inches being mixed uniformily with either hydrated lime or cement, and compacted and cured in accordance with the Contract Drawings, the specifications, and the directions of the Engineer.

6.95.3. MATERIALS.

(A) Cement shall meet the requirements of **Section 2.10** for a Type II Portland Cement.

(B) Hydrated Lime shall meet the requirements of ASTM C 207, Hydrated Lime for Masonry Purposes - Type N. Hydrated Lime which has slaked prior to mixing, for any reason, shall not be incorporated in the work. The Contractor is cautioned to obtain only freshly manufactured hydrated lime and to store it after delivery under conditions which will prevent moisture absorption and slaking.

6.95.4. METHODS.

(A) EQUIPMENT

No work will be permitted until all necessary equipment is on hand, inspected and approved by the Engineer.

(1) Mixers. A rotary pulverizing mixer or heavy plow shall be used for all mixing of the cement or hydrated lime with the subgrade soil. The use of a heavy plow will be permitted only if the rotary pulverizing mixer is not capable of adequately mixing the cement or lime-soil mixture to the full depth of treatment. Rotary mixers shall be equivalent to the seaman Duo-Stabilizer Model DS730 or the Brothers Master Mixer Model LSPRM84A.

(2) Compactors. Compaction equipment shall be a pneumatic tired or smooth steel wheel roller type.

(3) Graders. Grading equipment shall be of a type approved by the Engineer.

(B) WEATHER LIMITATIONS

Stabilization of the subgrade shall not be done when the subgrade temperature is below forty (40) degrees F., except by written permission of the Engineer. Cement or hydrated lime shall not be mixed with frozen subgrade soil or when the subgrade contains frost.

Cement or lime shall not be applied when wind conditions, as determined by the Engineer, are such that blowing cement or lime becomes objectionable or hazardous to traffic, workmen, and adjacent property owners.

(C) PREPARATION OF FOUNDATION

Prior to the addition of any cement or lime to the subgrade, the area to be stabilized shall be compacted, graded and shaped in close conformity to the typical sections, lines and grades as shown on the Contract Drawings or as specified by the Engineer.

(D) APPLICATION OF CEMENT OR LIME

Cement or hydrated lime shall be applied to the prepared subgrade materials by an approved method and at the rate of twenty-two (22) pounds of cement or lime per square yard of subgrade (4% by weight of

compacted stabilized subgrade), unless otherwise specified or directed by the Engineer. Spreading equipment shall uniformly distribute the cement or lime without excess loss. No equipment, except that used for spreading and mixing, shall be permitted to pass over the spread cement or lime until it is mixed. The Engineer may require the spread cement or lime to be sprinkled with water to reduce dusting.

Where application of cement or lime is done by bags, the bags shall be delivered to the project and spotted by hand on the roadbed to be stabilized. Spacing between bags shall be such to obtain the specified mixture with the soil for the given depth of six (6") inches. The bags shall then be split open, emptied and spread uniformly by hand before mixing.

Where additional cement or lime is ordered by the Engineer, in writing, in addition to that specified above, the City will pay for the additional cement or lime at the actual (material) cost per additional bag. The Contractor's attention is called to the fact that the use of this Item is contingent upon field conditions at the time of construction; therefore, no claim shall be made against the City for loss of anticipated profit due to the reduction of work under this item or the deletion of this item in its entirety.

(E) MIXING, COMPACTION AND SHAPING

After the required amount of cement or lime has been uniformly spread, it shall be mixed into the subgrade to the full depth of six (6") inches using a traveling rotary mixing machine or heavy plow. A minimum of three passes will be required to assure uniform incorporation of the cement or hydrated lime. The mixing operation shall be completed within four hours after application of the cement or lime. At this time, all of the cement or lime shall be thoroughly mixed in such a manner that the result is a homogeneous, friable mixture of subgrade soil and cement or lime, free from clods or lumps exceeding two (2") inches in size.

Immediately after the mixing operations are completed, the surface of the subgrade shall be rough graded, rolled, finish graded, and rerolled in order to obtain a compacted surface that is ready for the placement of the base or subbase pavement course. The surface of the finished subgrade course shall not extend above design grade at any location.

Thickness of the completed stabilized subgrade will be determined from measurements made in test holes located at random intervals not to exceed 500 feet. The measured thickness shall not deviate from the six (6") inch compacted depth specified by more than plus 1-1/2 inches or minus 1 inch.

Areas of cement or hydrated lime stabilized subgrade not meeting the specified thickness requirements shall be reconstructed when and where directed by the Engineer.

(F) CURING

Following mixing operations, the stabilized course shall be allowed to cure for at least 24 hours plus any additional time required for the cement or lime to properly react with the subgrade soil. Curing periods in excess of 24 hours shall be as determined and specified by the Engineer. During the curing period, the surface of the material shall be kept moist up to the time of pavement material placement to prevent drying and cracking.

(G) PROTECTION OF UNDERGROUND FACILITIES

Extreme care shall be exercised by the Contractor while performing the work prescribed herein to insure that continuing service to all underground facilities will be maintained, without incurring damage to any of these facilities.

6.95.5. MEASUREMENT. The quantity of Cement Stabilization of Subgrade or Lime Stabilization of Subgrade to be paid for will be the number of square yards of 6" deep subgrade material treated with cement or hydrated lime, respectively, and satisfactorily stabilized within the payment lines shown on the Contract Drawings or otherwise specified in writing by the Engineer.

6.95.6. PRICES TO COVER. The unit prices bid per square yard for Cement Stabilization of Subgrade, for Lime Stabilization of Subgrade, and for Cement or Lime Stabilization of Subgrade shall cover the cost of all labor, materials, plant, equipment, insurance, and incidentals necessary to complete the work under this section.

No payment will be made for any maintenance, repairs, or reconstruction of the stabilized subgrade made before acceptance.

Payment will be made under:

Item No.	Item	Pay Unit
6.95 A	CEMENT STABILIZATION OF SUBGRADE	S.Y.
6.95 B	LIME STABILIZATION OF SUBGRADE	S.Y.
6.95 AB	CEMENT OR LIME STABILIZATION OF SUBGRADE	S.Y.

SECTIONS 6.96 AND 6.98 (VACANT)

SECTION 6.99 - Audio/Video Documentation Survey

6.99.1. DESCRIPTION. Under this section, the Contractor shall provide color video taping of surface features located within the scope of this project, supported by simultaneous audio description of said features.

Such coverage shall include, but not be limited to, all existing sidewalks and driveways. Of particular concern are any existing faults, fractures or defects.

6.99.2. METHODS. The location of the sidewalks and driveways shall be identified visually by house or building number, and through the commentary of the electrographer on the audio portion of the tape.

The person performing this work shall be a fully qualified, professional electrographer, actively engaged in pre-construction color audio-video tape documentation and survey projects. Prior to commencing work, the contractor shall provide the following:

(A) A sworn and notarized statement identifying all pertinent equipment owned or controlled, which is available to perform the work herein specified by this contract.

(B) A sworn statement outlining the firm's experience in performing the work covered by this contract.

(C) Three (3) letters of reference from Municipalities or Authorities where the firm's pre-construction documentation service has been performed on the same/similar types of projects.

(D) Sample tape submitted to the electrographer at the firm's expense, covering a specific sample route prescribed by the Engineer. Such sample tape shall cover at least fifteen hundred (1,500) linear feet, and a minimum of thirty (30) minutes surveying time.

Audio-video tape shall be XHG Professional Grade, one-half inch (1/2") color video cassette (VHS format) and shall be recorded on at "Standard" speed. Reprocessed tapes will not be acceptable. Video output from camera(s) used must be capable of producing NTSC-500 lines. Resolution in the Y channel, minimum 500 TV lines at center. Geometric distortion shall not exceed 2% of picture height at any point in picture area.

The audio-video tape shall have the potential to convey one (1) video track and one (1) audio track. The video and one audio track (audio track 1) shall be recorded simultaneously as original live recordings and shall not be copies of other audio or video recordings. These recordings shall consist of a video record of all curbs and sidewalks within the limits of construction, and the commentary of the electrographer making the video record.

All video recordings shall, by electronic means, display continuously and simultaneously generated transparent digital information to include the date and time of recording, the name of the street location within the project limits, the project name, direction of travel and the viewing side. The date and time shall appear in the upper left hand corner of the picture--example:

Time 8:35:15
Date 9/20/79

The project name, name of street location within project limits, direction of travel and viewing side shall appear on the lower half of the screen - example:

N. on First Ave. W/S
33rd St. to 34th St.

All taping shall be done during times of good visibility. Adequate lighting shall be provided, where necessary. Written authorization by the Engineer to proceed with video documentation shall be done with consideration of existing seasonal climate conditions. The Contractor will not be responsible for the removal of snow, leaves, debris or parked vehicles.

Coverage of the sidewalk areas may be obtained by use of conventional wheeled vehicles and/or by walking. The tape quality and content requirements, as specified, apply for both methods of conveyance.

The speed in the general direction of travel of the conveyance used during taping shall be of a slow enough rate to ensure the proper coverage and clarity. Panning and zooming rates shall be controlled sufficiently that the playback will produce optimum clarity of the sidewalk being viewed.

All tapes produced under this contract shall be turned over to the Engineer on an every other day basis in order for the Engineer to review and monitor quality and progress. Any portion of the tape coverage deemed unacceptable by the Engineer shall be retaped by the Contractor at his own expense.

All tapes (cassettes and cases) shall be properly identified by tape number, location, project name, and shall become the property of the Engineer. A record of the contents of each tape shall be supplied by a run sheet identifying each segment in the tape by location, i.e., roll number, street or easement viewing, tape counter number, viewing side, point starting from, traveling direction and ending point.

The audio-video taping, as specified herein, shall be conducted prior to construction. No construction work which might affect the area to be video taped shall commence until such taping has been completed and accepted by the Engineer.

The work described herein is in addition to the photographs required by Item 6.43, Photographs, if scheduled in the contract.

6.99.3. PRICE TO COVER. The lump sum price bid for Audio/Video Documentation Survey shall cover the cost of furnishing all labor, materials, equipment, insurance, and necessary incidentals required and completing the work, in accordance with the specifications and the directions of the Engineer.

Payment will be made under:

Item No.	Item	Pay Unit
6.99	AUDIO/VIDEO DOCUMENTATION SURVEY	L.S.

SECTION 7.00 (VACANT)

SECTION 7.01 - Subway Sidewalk Frames and Gratings

7.01.1. INTENT. This section describes the replacement and/or reset of existing subway sidewalk gratings and frames where directed.

7.01.2. DESCRIPTION. Under this section, the Contractor shall reset existing and/or replace existing worn or damaged subway sidewalk frames and gratings where directed; all in accordance with the Contract Drawings, the specifications, and the directions of the Engineer.

7.01.3. MATERIALS. Standard Frames and Gratings shall be of a Press-Locked rectangular design, similar to "X-Bar" grating, Type DD, as manufactured by IKG Industries, Division of Harsco Corp., 50-09 27th Street, L.I.C., N.Y. 11101, or an approved equivalent, and shall comply with the following requirements:

(A) Material to be steel.
(B) Main bars to be 2-1/2" x 3/16" spaced 15/16 inches center to center, except for heavy gratings which shall be 4" x 1/4" spaced 1-3/16 inches center to center.
(C) Cross bars to be of rectangular cross section having a depth of 1", flush top, and spaced 2 inches center to center, except for heavy gratings which shall be 1-1/2" x 3/16" spaced 2 inches center to center.
(D) Main bars and cross bars to be slotted at their intersections so as not to remove excessive material from the load sustaining members.
(E) Main bars to be "dovetail" slotted and have their slots solidly filled by the cross bars.
(F) Grating and Frames shall be hot dipped galvanized after fabrication.
(G) Removable grating panels shall be one (1) panel wide and provided with N.Y.C. Transit Authority Standard locking device.
(H) Grating frame supports shall be of 2-1/2" x 2-1/2" x 1/4" angles with 1/2" diameter welded studs spaced 3 inches center to center.
(I) Overall dimensions, details, directions of bearing bars, and number of panels shall be in accordance with the Contract Drawings and the requirements of the N.Y.C. Transit Authority.

Cement grout shall comply with the requirements of Section 3.06, Type 2.

Concrete shall be Class B-32, Type IIA, in accordance with the requirements for concrete under Section 4.13, and pigmented where indicated and where required to match adjoining sidewalk.

7.01.4. CONSTRUCTION METHODS.

(A) GENERAL

All work shall be done in accordance with the requirements of the New York City Transit Authority and the directions of the Engineer.

Existing frames and gratings designated to be removed shall become the property of the Contractor and shall be removed and disposed of away from the site.

Existing subway construction designated to remain shall be maintained and protected. Damage caused by the Contractor's operations shall be repaired or replaced at the Contractor's own expense, to the satisfaction of the Engineer.

The Contractor shall provide shields as required in the vent opening to prevent debris from entering the subway. Shop drawings showing the type and construction of shields shall be submitted by the Contractor to the Engineer for approval.

Removable grating panels shall be installed in the same location as existing panels.

Except for the removable grating panels, all other grating panels shall have their ends grouted in place to their frame angles.

Where the Contractor is required to install gratings and/or frames that are provided by the NYC Transit Authority, the gratings and frames will be made available to the Contractor at a designated NYC Transit Authority Storage Yard.

(B) FURNISHING AND INSTALLING SUBWAY SIDEWALK GRATING

The Contractor shall, where indicated on the Contract Drawings or ordered by the Engineer, carefully remove existing subway sidewalk gratings and replace them with new gratings.

Where the concrete in the periphery of the gratings is spalled or damaged, it shall be repaired by the Contractor with epoxy mortar as shown on the Contract Drawings or as directed by the Engineer.

(C) FURNISHING AND INSTALLING SUBWAY SIDEWALK FRAMES & GRATINGS

The Contractor shall carefully remove both existing subway sidewalk frames and gratings that are designated to be replaced and replace them with new frames and gratings.

New frames shall be set true to line and grade, flush with the adjoining pavement, and cast in a concrete collar as indicated on the Contract Drawings or as directed by the Engineer.

7.01.5. MEASUREMENT. The quantities to be measured for payment under each item shall be the number of square feet of sidewalk subway gratings satisfactorily installed, new or reset, measured within the frame perimeter.

7.01.6. PRICES TO COVER.

(A) INSTALL NEW OR RESET EXISTING SIDEWALK SUBWAY FRAMES AND GRATES

The contract price bid shall be a unit price per square foot and shall cover the cost of all labor, material, plant, equipment, and incidentals necessary to remove and dispose of existing sidewalk subway frames and gratings, and install new frames and grates, or remove and reset existing frames and gratings, all in accordance with the Contract Drawings, the specifications, and the directions of the Engineer.

Epoxy mortar repairs, when required, shall be paid for under Item 7.02 - Epoxy Mortar Repairs.

(B) PICK-UP & DELIVER SIDEWALK SUBWAY FRAMES AND GRATES

The contract price bid shall be a unit price per square foot and shall cover the cost of all labor, material, plant, equipment, and incidentals necessary to pick-up sidewalk subway grates, with or without frames, from a designated NYC Transit Authority Storage Yard and deliver them to the site, in accordance with the specifications and the directions of the Engineer.

(C) FURNISH NEW SIDEWALK SUBWAY FRAMES AND GRATES

The contract price bid shall be a unit price per square foot and shall cover the cost of all labor, material, plant, equipment, insurance, and incidentals necessary to furnish new frames and gratings, complete with shop drawings, all in accordance with the Contract Drawings, the specifications, and the directions of the Engineer.

Payment will be made under:

Item No.	Item	Pay Unit
7.01 AB	INSTALL NEW OR RESET EXISTING SIDEWALK SUBWAY FRAMES & GRATINGS	S.F.
7.01 B	PICK-UP & DELIVER SIDEWALK SUBWAY GRATINGS	S.F.
7.01 C	FURNISH NEW SIDEWALK SUBWAY FRAMES AND GRATINGS	S.F.

SECTION 7.02 - Epoxy Mortar Repairs

7.02.1. DESCRIPTION. Under this Section, the Contractor shall remove deteriorated concrete and apply epoxy mortar in areas prepared for patching on the existing wall, in accordance with the Contract Drawings, the specifications and the directions of the Engineer.

7.02.2. MATERIALS. Epoxy mortar shall consist of a mix of one (1) part, by volume, of binder compound, and one (1) part, by volume, of sand.

Binder compound shall be a two-component epoxy-resin system such as SIKADUR LO-MOD GEL #360 as manufactured by Sika Chemical Corporation of Lyndhurst, N.J., or an approved equivalent. The two components of the binder compound shall be mixed in the proportion as specified by the manufacturer.

Sand shall average 20 to 40 mesh fineness and shall be bagged, clean, hard, high grade silica sand, free of all foreign, deleterious or other objectionable materials.

7.02.3. METHODS. The Contractor shall remove the deteriorated concrete on the repair surface to a depth where sound concrete is reached. The location and limits of repair area shall be as designated by the Engineer. In no case will payment be made for repair extending beyond the designated limits, unless directed by the Engineer.

All surfaces to be patched with epoxy mortar shall be thoroughly cleaned to the satisfaction of the Engineer. After cleaning and just prior to the application of epoxy mortar, the surface shall be air blown.

Epoxy mortar shall be applied only to clean and dry surface and shall be applied at a surface temperature range of 40 degrees F to 85 degrees F. The method of application shall be in accordance with the binder manufacturer's instructions.

The epoxy mortar shall completely fill the patched area to its full depth. Edges shall be flush with the existing concrete. The finished surface shall be smooth and shall show no bumps, ridges, depressions, sags or other blemishes and shall not be out of line with respect to the existing concrete surface at the periphery of the patched area. The surface of the existing concrete shall be primed with a light brush coat of binder immediately prior to application of the epoxy mortar to assure complete wetting of the existing surface.

7.02.4. MEASUREMENT. The quantity to be measured for payment shall be the number of square feet of wall actually repaired to the satisfaction of the Engineer.

7.02.5. PRICE TO COVER. The contract price per square foot shall cover the cost of all labor, materials, plant, equipment, and incidentals necessary to remove the deteriorated concrete, to clean and prepare the designated surfaces for patching, and to apply the epoxy mortar, all in accordance with the Contract Drawings, the specifications and the directions of the Engineer.

Payment will be made under:

Item No.	Item	Pay Unit
7.02	EPOXY MORTAR REPAIRS	S.F.

SECTION 7.03 (VACANT)

SECTION 7.04 - Painting Handrailing

7.04.1. WORK TO INCLUDE. Under this Section the Contractor shall prime and paint handrailing all in accordance with the Contract Drawings, the specifications and the directions of the Engineer.

7.04.2. MATERIALS. The primer coat for galvanized surfaces shall be zinc dust-zinc oxide, conforming to Federal Specifications TT-P 641G as shown on Contract Drawings. The finish coat shall match Pantone Color Specifier #350. Apply three (3) coats of paint (Epoxy Primer, Epoxy Intermediate, and Polyurethane Top Coat) in compliance with the requirements of **Subsection 2.13.4**.

7.04.3. METHODS. New galvanized steel handrailing shall be primed as specified above and shall receive three (3) coats as specified above.

Surfaces to be painted shall be cleaned of all dirt, grime, oil, or other materials which will affect the proper application and bonding of paint to the surface which is to be painted in accordance with the recommendations of the paint manufacturer.

The Contractor shall take all necessary measures to insure that all paint is applied to dry surfaces. Costs incurred for corrective actions required as a result of failure to comply with this provision shall be borne by the Contractor and such corrective measure shall be taken by him at his own expense.

7.04.4. PRICE TO INCLUDE. The price bid for painting new handrailing shall be a lump sum price and shall include the cost of furnishing all labor, materials, plant, equipment, insurance, and necessary incidentals required; and completing the work in accordance with the Contract Drawings, the specifications and the directions of the Engineer.

Payment will be made under:

Item No.	Item	Pay Unit
7.04	PAINTING HANDRAILING	L.S.

SECTIONS 7.05 THRU 7.11 (VACANT)

SECTION 7.12 - Soil Density Testing

7.12.1. INTENT. This section describes the performance of Proctor analyses of designated soils and the testing of designated soils for in-place density, to ensure that soil compaction requirements for the project are met. The Contractor shall retain the services of an independent Soils Testing Laboratory, approved in accordance with Section 5.01 and subject to the pre-qualification requirements hereinafter specified, to perform the work under this section.

7.12.2. PRE-QUALIFICATION OF TESTING LABORATORY. The proposed testing laboratory shall be completely independent from the Contractor or any subsidiary thereof.

All proposed testing laboratories shall be duly licensed by the New York City Department of Buildings and approved by DDC's Director of QA, and such license shall be maintained for the duration of the project. Testing laboratories licensed outside of New York may be considered subject to the approval of the Commissioner.

All proposed testing laboratories shall have a proven record of performance in providing the soil testing services specified under this section. All technicians engaged in soil testing must be certified by the Director of QA.

It is understood that no subcontract for the performance of required soil testing work will release the Contractor from his responsibility under the contract to execute all work in conformance with the Contract Drawings and specifications.

7.12.3. SCOPE OF WORK. Under this section, the Contractor and approved Laboratory shall furnish all labor, materials, plant, equipment, and necessary incidentals required to: obtain soil samples from the site or other locations, transport samples to Laboratory, perform Proctor analysis of soil samples, and submit written documentation of results; perform in-place soil density tests and submit written documentation of results; and perform all work incidental thereto, all in accordance with these specifications and the directions of the Engineer.

(A) Proctor Analysis of Soil Samples.

Soils for which in-place density tests are to be performed shall undergo a Proctor analysis in order to determine the maximum dry density and optimum moisture content of the soil material to be tested. Soils designated for Proctor analysis may include existing subbase materials as well as proposed fill material,

as directed. The number and location of soil samples to undergo Proctor analyses shall be as directed by the Engineer.

Each soil sample designated for Proctor analysis shall be recovered from the site or other location (stockpile, etc.) and transported to the Laboratory, in a manner acceptable to the Laboratory and the Engineer.

The maximum dry density and the optimum moisture content of each soil sample shall be determined by the Standard Proctor Test in accordance with AASHTO T 99 (ASTM D 698). If, in the opinion of the Laboratory, a soil sample is too granular to achieve realistic maximum density/optimum moisture readings by the Standard Proctor Test method, other appropriate test methods (Vibratory Table, etc.) may be substituted, subject to the approval of the Engineer.

Written documentation on Laboratory stationery of the results of each Proctor analysis shall be furnished to the Engineer, such documentation to include the following:

1. Date sample was tested.
2. Location and date sample was obtained.
3. Brief description of sample (Soil type, color, consistency, etc.) or other identification.
4. Maximum Dry Density (lbs. per cu. ft.).
5. Optimum Moisture Content (%).
6. Test method (if other than Standard Proctor).
7. Signature and seal of qualified Laboratory Representative.

Distribution of copies of Proctor analysis results shall be as directed by the Engineer.

(B) In-Place Soil Density Tests.

In-place soil density tests will be required to ensure that soil compaction requirements for the project are met.

Test locations may include: existing subbase material upon which fill material is to be placed, or upon which water/sewer pipe, catch basins, basin connection pipe or other structures are to be constructed; compacted fill material for pavement construction or for backfill of water/sewer pipe, catch basins, basin connection pipe or other structures; and other locations directed by the Engineer. The number and location of in-place soil density tests shall be as directed by the Engineer.

The Contractor's attention is directed to the fact that it will be necessary, in some cases, to excavate through temporary pavements in order to test the compaction of backfill over water mains, etc., and upon completion of the test, backfill and place new temporary pavement as necessary. No direct payment will be made for such excavation, backfill or replacement of temporary pavement.

The preferred test method for determining the in-place dry density and moisture content of the soil is the Sand Cone Test, in accordance with AASHTO T 191, T 205. Other approved types of density tests (nuclear, etc.) are permitted, provided that density values corresponding to those obtained by the Sand Cone Test method are established to the satisfaction of the Engineer. Such alternate density test methods shall be checked at least once every fifty (50) tests against the Sand Cone Test method, as directed, to minimize equipment calibration errors. No direct payment will be made for additional density tests taken solely for calibration purposes.

After the in-place dry density of the soil is determined, the Degree of Compaction shall be computed by the following formula:

$$\text{Degree of Compaction (\%)} = \frac{\text{In-Place Dry Density(lbs./cu.ft.)}}{\text{Maximum Dry Density (lbs./cu.ft.)}} \times 100$$

Written documentation on Laboratory stationery of the results of each in-place soil density test shall be furnished to the Engineer, such documentation to include the following:

1) Date of Field Test.
2) Location of Field Test.
3) Brief Description of Tested Soil (Soil Type, Color, Consistency, etc.) or other identification.
4) In-Place Dry Density (lbs. per cu.ft.).
5) In-Place Moisture Content (%).
6) Density Test Method (if other than Sand Cone).
7) Maximum Dry Density (lbs. per cu.ft.) from corresponding Proctor analysis of same soil type.
8) Degree of Compaction (%).
9) Signature and seal of Qualified Laboratory Representative.

Distribution of copies of Density Test results shall be as directed by the Engineer.

7.12.4. EVALUATION OF SOIL TEST RESULTS. All natural earth sub-grade, fill and backfill material under this contract shall be compacted to a minimum of 95 per cent of Standard Proctor Maximum Dry Density.

The Degree of Compaction, as determined above, will be used for control purposes in determining compliance with project compaction requirements. However, it will be the responsibility of the Engineer to evaluate the results of the soil tests performed and determine the acceptability of subbase preparation and fill construction.

7.12.5. ESTIMATED QUANTITIES. The number of Proctor analysis and in-place density tests, as listed under Item Nos. 7.12 A and 7.12 B of the BID SCHEDULE, are estimated quantities. No guarantee or assurance of these quantities is given by the Department. The Commissioner reserves the right to reduce the quantities stated and neither the Contractor nor the laboratory shall have any claim for damages for anticipated profits or loss of profits due to any disparity between estimated quantities and "as-built" quantities.

The Director of Quality Assurance reserves the right to arrange for other testing laboratories to perform a portion of the work contemplated herein. In such instance, neither the Contractor nor the Laboratory shall have any right to damages for anticipated profits or loss of profits for the work performed by others.

7.12.6. MEASUREMENT. The quantity to be measured for payment under Item No. 7.12 A shall be the actual number of Proctor Analyses completed, for which results have been documented in writing and furnished to the Engineer, as described herein for testing roadway subbase. Protector analyses to test backfill for sewer and water main structures and trenchs will not be measured for payment under this item but will be deemed included in the unit prices bid for all scheduled sewer and water main work items.

The quantity to be measured for payment under Item No. 7.12 B shall be the actual number of In-Place Soil Density Tests performed, for which results have been documented in writing and furnished to the Engineer, as described herein for testing roadway subbase. In-place soil density testing for backfilling sewer and water main structures and trenches will not be measured for payment under this item but will be deemed included in the unit prices bid for all scheduled sewer and water main work items.

No direct payment will be made for in-place density tests performed for the sole purpose of checking equipment calibration when alternate density test methods are used.

7.12.7. PRICES TO COVER. The contract price per each Proctor Analysis, under Item No. 7.12 A, shall include the cost of all labor, materials, plant, equipment, insurance, and necessary incidentals to obtain soil samples, transport samples to the Laboratory, perform Proctor analyses, provide written documentation of the results, and perform all work incidental thereto, all in accordance with these specifications and the directions of the Engineer.

The contract price per each In-Place Soil Density Test, under Item No. 7.12 B, shall include the cost of all labor, materials, plant, equipment, insurance, and necessary incidentals to perform density tests, provide written documentation of the results, and perform all work incidental thereto, all in accordance with these specifications and the directions of the Engineer.

Payment will be made under:

Item No.	Item	Pay Unit
7.12 A	PROCTOR ANALYSIS	EACH
7.12 B	IN-PLACE SOIL DENSITY TEST	EACH

SECTION 7.13 - Maintenance of Site

7.13.1. DESCRIPTION. This section describes the maintenance, protection and cleanup of the construction site. The Contractor is placed on notice that he shall be required to provide a safe and clean site throughout all phases of the work and during all of his operations, and further that the monitoring by the City of the Contractor's site maintenance, site protection and site clean up is considered for the purposes of this contract to be a project objective necessary to eliminate and/or mitigate public disruption and inconvenience, and to insure public health and safety. The Contractor shall therefore, at all times, conduct this operation in a manner which promotes a clean site and insures the convenience, safety and health of general users consisting of, but not limited to, the motorist, the pedestrian and the abutting property owners/tenants, as well as those of his own employees.

The provisions of this section are supplementary to and do not abrogate the General Conditions (Section 1.06) or the General Notes on the Contract Drawings relating to the protection and cleanup of the site, and the delivery and storage of materials at the site. Furthermore, any conditions pertaining to the maintenance, protection and cleanup of the construction site during the life of the contract which are addressed in the General Conditions and in the General Notes on the Contract Drawings, whether or not addressed under this Section, shall be deemed as having been addressed under this Section.

7.13.2. METHODS.

(A) GENERAL

Work under this Item shall start from the date of written notice to commence work or from the actual start of construction work at the site, whichever is later.

The Contractor shall be responsible for the maintenance of the contract streets or portions of streets pursuant to Article 7 of the Standard Construction Contract.

The Contractor shall provide the necessary personnel and equipment for adequate site maintenance within and adjacent to the contract site and all detour routes. He shall keep the work site and adjacent areas free and clean from all rubbish, debris, dust, idle construction equipment, discarded or leftover construction material and excavated material as outlined below. He shall also keep his haul routes outside the work site free and clean from all rubbish, debris and dust resulting from his operations.

The Contractor shall protect the public from damage to persons and property, which may result directly or indirectly from any construction operation. Such protection shall include, but not be limited to, providing proper street drainage and diversion of runoffs from private properties by such means as sandbagging or pumping, controlling soil erosion and/or soil migration.

The Contractor shall be fully responsible for maintaining the completed work in an acceptable condition and protecting the completed work until relieved of such responsibility by acceptance of this contract or the completed items of work. Upon completion of each phase of work, or when ordered by the Engineer, and before acceptance and final payment are made, the Contractor shall remove all surplus and discarded material, rubbish, equipment, debris, and temporary structures from the site, and restore the working site as directed by and to the satisfaction of the Engineer. All sewers, water mains, appurtenant structures, etc., shall be clean, free from debris and deposits.

(B) MAINTENANCE OF STREETS

Maintenance of streets and detours for vehicles shall include any repairs, as directed, including the filling of pre-existing and new potholes that may be necessary due to usage of streets by traffic. This repair work will be paid for under Item No. 4.02 CB - ASPHALTIC CONCRETE MIXTURE, or 4.02 CA - BINDER MIXTURE, as provided in the Bid Schedule.

Also, the Contractor shall provide reasonably safe and convenient walkways and passageways for pedestrian traffic. Where required by the contract documents or when ordered by the Engineer, the Contractor shall construct and maintain, as directed, temporary asphalt walkways and ramps in accordance with the requirements of Subsection 7.13.2.(G)(1), below, temporary wood plank or steel plate ramps or other configurations and materials, as may be required, and provide temporary pedestrian passageways (as per the NYC Department of Transportation's Standard Details of Construction, Standard Drawing H-1004, or as otherwise approved). He shall make the surface(s) of the pedestrian pathway(s) safe by eliminating ponding conditions, removing debris, sweeping, and wetting for dust control.

He shall maintain access to all abutting properties and pedestrian usage of sidewalk areas, both old and new, at all times, as directed by the Engineer and as shown on the Contract Drawings, except at "Sidewalk Closings" as designated or as directed.

The Contractor shall maintain the traveled way in such a condition and conduct operations in such a manner that snow and ice may be readily removed by others as and when necessary, and in such a manner that proper drainage is provided for the melting of snow in the banks resulting from normal plowing. However, the Contractor will not be responsible for snow or ice removal on the pavement or traveled way, except within the limits of the work zone(s) and on the sidewalk fronting his office and the Engineer's field office.

(C) CONTROL OF DUST AND DEBRIS

The Contractor shall control dust and debris within the work area and the traveled way. He shall mitigate material spilling from trucks with the use of tarpaulin covers. All dust producing materials shall be wet down with water to the extent necessary to minimize dust. When public or local inconvenience is caused by dust occasioned by the sweeping and cleaning operations, the Contractor shall furnish and sprinkle water onto the affected surfaces during the sweeping and cleaning operations; however, the application of water shall not be used as a substitute for sweeping.

The Contractor shall perform all his work operations so that dust and debris is minimized within the work zone and mitigated before any of it leaves the work zone. Movement of dust and debris by wind, vehicles, persons, and the Contractor's operations shall be cause for sweeping and watering to be implemented immediately as directed by the Engineer. Also, should dust and dirt cover over all or portions of the work site it shall also be cause for immediate sweeping and watering by the Contractor.

All water furnished and applied under this item shall be free from harmful materials and shall be reasonably clean. Water shall be delivered in tanks or tank trucks, or by use of hydrants as permitted by the Department of Environmental Protection; however, no guarantee is made by the City as to the availability of suitable hydrants at the site. Where no suitable hydrants exist at the site, the Contractor shall be required to furnish water in tanks or tank trucks at no additional cost to the City.

(D) CLEANING OF SITE AND WASTE DISPOSAL

The Contractor shall be responsible for the removal of all rubbish and debris from the site of the project. He shall remove all piles of rubbish, debris, waste material and wood cratings as a result of his operations as they accumulate and when directed by the Engineer, and he shall cart them away from the site. He shall employ and keep engaged for this purpose an adequate force of laborers.

The Contractor shall at the beginning and end of each day be required to pickup all litter, trash and debris (excluding garbage and recycled material set to be picked up by scheduled private and/or public sanitation pickups) adjacent to and within the work zone on a daily basis, seven (7) days a week. He shall also during the day keep clean all roadways, sidewalks and other places in which the work is being performed or which are to be used in connection therewith.

The Contractor shall protect the site against unauthorized dumping of waste materials by patrolling the site and reporting violations to the Engineer, and should any unauthorized dumping occur, it shall be immediately remove by the Contractor to the Engineer's satisfaction.

While performing the above site cleaning work, the Contractor shall have available an approved mechanical street sweeper, with operator, suitable for removing dirt, debris, dust and loose stones; a sprinkler truck; adequate size pick-up truck with driver and laborers; an adequate supply of brooms, sixteen (16) inch wide or larger; and necessary hand tools and materials. The Contractor shall arrange to have necessary persons and equipment assigned to satisfy concerns relating to required clean up and restoration work. These persons with equipment shall be available to correct all matters requiring attention and shall be immediately available to respond to directives issued by the Engineer regarding specified problems of maintenance and cleaning.

The Contractor shall perform this work during the normal or extended working days. However, when required in accordance with the approved schedule or directed, the Contractor shall be prepared to extend this work beyond the normal work day, including weekends.

The Contractor shall provide trash receptacles for use by its construction staff. The trash shall be periodically removed and disposed of in compliance with local ordinances.

(E) DISPOSAL OF REMOVED MATERIALS

Except as may be otherwise specified herein or in the General Conditions, all materials which are permanently removed from the existing construction by the Contractor in accordance with the contract documents shall become his property and shall be disposed of by him away from the site.

In addition, it is the intent of NYCDDC to have all metals that are excavated and removed from the site, such as iron castings street hardware (i.e. manhole frames and cover, valve box covers, hydrants, etc.), ductile iron sewer pipe, steel and ductile iron water main pipe, trolley track rails, etc. (excluding steel reinforcement embedded in concrete), recycled provided that they are not deemed contaminated or hazardous. Therefore, the Contractor shall agree to make every effort possible to recycle said metals removed from the site. As a record of such compliance, the Contractor shall be required to keep an accurate log of said materials that are excavated and removed from the site and where and how said materials are either processed for reuse or disposed of away from the site. A copy of said log shall be submitted to the Engineer along with the invoice that he submits for payment each month. For a list of possible recycling and reuse outlets, the Contractor is refered to the “Directory of Recycling and Reuse Outlets for Reclaimed and Surplus Building Materials” published by NY Wa$teMatch, c/o Industrial & Technology Assistance Corp., 253 Broadway, Room 302, New York, N.Y. 10007, Tel. 212-442-5219, web site: “www.wastematch.org".

(F) REMOVAL OF SURPLUS PLANT AND EQUIPMENT

When ordered by the Engineer, the Contractor shall be required to promptly move from any location within the contract area all such items of plant and equipment determined to be no longer necessary for

the effective prosecution of the work at such point, to other locations to be designated by the Engineer. If, in the opinion of the Engineer, plant and equipment are no longer required on any portion of the work, they shall be removed from the site when so ordered.

Where access to regularly scheduled private and/or public sanitation pickups, such as garbage and recycled materials, is blocked due to the Contractor's operations, the Contractor shall coordinate a schedule for collection of said materials, and/or he shall collect and transport garbage and recycled materials to collection points, as directed by the Engineer, for disposal by public or private collections, as appropriate.

Waste material shall not be dumped in or on any part of the City's property except by special permission of the Engineer. Concrete mixing trucks shall not be washed on City streets nor shall the waste material from the washing out of concrete mixing trucks be discharged to any street, public property, sewer manhole, catch basin, sewer, street gutter, or other above or below ground structures. All excavated materials falling on roadways and sidewalks shall be prompty swept up and removed.

(G) MAINTAINING ACCESS TO PROPERTIES AT CUT AND FILL LOCATIONS

When it is necessary to cut or fill at abutting properties in accordance with the contract requirements, the Contractor shall immediately commence construction to provide entrance to and egress from said properties as shown on the Contract Drawings and/or by one of the following methods, or modifications made thereto, when so ordered by the Engineer:

(1) "Asphalt Ramps"

Temporary access ramps shall be made hard and smooth surfaced with asphaltic material (to be paid for under Item No. 4.02 CB or 4.02 CA, as provided in the Bid Schedule) The slope of temporary ramps at driveways and transition areas shall be approximately 25% [approximately a three (3") inch rise in one (1') foot] and be limited to a width of not more than eight (8') feet for single driveways and not more than twelve (12') feet for double driveways. The slope of temporary ramps at street hardware shall range between 1:10 and 1:6 (rise:run). The slope of temporary pedestrian ramps shall be limited to a width of not less than four (4') nor more than five (5') feet and a slope of approximately 1:12.

(2) "Benching"

In locations where embankments are to be constructed on existing slopes or against existing embankments with slopes steeper than 1 (vertical) on 3 (horizontal), slopes shall be benched as shown on the Contract Drawings. Benches shall be constructed as a "Temporary Retaining Wall" (Item No. 8.12). Access to abutting properties shall be provided as shown on the Contract Drawings or as per the details shown on the NYC Department of Transportation's Standard Details of Construction, Standard Drawing for Temporary Wooden Steps (Item No. 7.15).

(3) "Specified"

By methods specified and detailed on the Contract Drawings.

(H) FINAL CLEARANCE OF SITE

Immediately after the completion of the contract and before final acceptance of the Work by the Department, the Contractor shall remove all surplus material, temporary structures, and debris resulting from his operations. Any painted markings (layout survey, etc.), excluding utility markings made under 16 NYCRR Part 753 (utility markings made under Part 753 shall not be removed), that have been placed by the Contractor and which are still remaining at the end of the contract shall be removed. Removal of painted markings shall be done using an approved power-washing method. The entire area shall be cleared and left in a neat presentable manner satisfactory to the Commissioner.

If as a result of the Contractor's operations, obstructions have fallen into a navigable waterway, they must be removed and the waterway and channel cleared; and the Contractor must obtain a release from the United States Coast Guard.

7.13.3. STORAGE OF MATERIALS AND EQUIPMENT. Roadways, sidewalks, gutters, crosswalks, and driveways shall at all times be kept clear and unobstructed unless a permit has been obtained from NYC Department of Transportation authorizing encumbrance of the roadway and/or sidewalk with equipment and/or material, provided it is in a manner which will not prevent the safe passage of vehicular traffic on such roadway designated to remain open, or the safe passage of pedestrians on such sidewalk and crosswalks, or block the normal drainage flow within the streets.

(A) DELIVERED MATERIALS NOT TO OBSTRUCT TRAFFIC

All materials delivered upon but not placed in the work shall be neatly piled so as not to obstruct public travel and shall be removed from the line of the work, at the direction of the Engineer, at no additional cost to the City. Unless the materials are so removed by the Contractor upon notice from the Engineer, the materials may be removed by the Commissioner and the expense thereof charged to the Contractor.

(B) PILING OF MATERIALS DELIVERED TO WORK SITE

Materials placed on the sidewalk or roadway shall be piled or stacked in a satisfactory and safe manner, enclosed with plastic barrels (Section 6.87) or barricades (Section 6.28 AA or 6.28 BA), and with pedestrian steel barricades (Section 7.36), “WARNING: KEEP OUT” signs (Section 6.25), and heavy duty safety orange construction fencing. The heavy duty safety orange construction fencing shall be safety orange in color, of heavy duty construction grade flexible plastic (light duty plastic screening fence will not be accepted), have a minimum height of four (4’) feet, and shall be of a type approved by the Engineer. The heavy duty safety orange construction fencing shall be held vertically in place for its full length and shall be securely attached to barrels, utility poles, or a combination thereof, or other traffic control devices shown on the Contract Drawings or directed, in a manner approved by the Engineer. Loose materials shall be covered with tarpaulins, suitably held down. Areas adjacent to stored materials shall be kept clean and watered as required and as directed by the Engineer. When such materials are removed, the sidewalks and roadways must be immediately swept clean by the Contractor and control of dust shall be mitigated in accordance with the requirements of Subsection 7.13.2.(C), above.

Materials to be used in the work shall be compactly piled within limits to be designated by the Engineer. Sand and coarse aggregate may be piled within the roadway area. All old and such new material as has been approved, except sand and coarse aggregate, shall be neatly piled by the Contractor on the front half of the sidewalk, on planks or plates, if the same be flagged or otherwise improved.

Stored material shall be neatly stacked, placed at locations designated by the Engineer, and suitably enclosed or covered, protected, and wet down, as stipulated above. Streets under such construction material or equipment shall be shielded by wooden planking, skids or other protective covering approved by the Engineer. All pipes, fittings and appurtenances must be carefully stored, as approved by the Engineer, so as to prevent surface drainage, excavation material or other foreign matter from entering into the pipes, fittings and appurtenances.

Waste material and excavated material will under no conditions be permitted to remain on the work site or project streets, but must immediately be removed by the Contractor.

Provisions must be made by the Contractor to maintain curb-line drainage through storage areas. Stored materials shall not block the normal drainage flow or cause ponding conditions within streets, and shall not be placed within fifteen (15’) feet of any fire hydrant (working or not), at bus stops, within tree root zone areas, or any other areas as set forth in the rules of the department the obstruction of which would impair the safety or convenience of the public (also see General Notes on Contract Drawings for any additional information). In a street upon which there is a surface railroad, construction materials or equipment shall not be placed nearer to the track than five (5) feet.

When no work is in progress, at least one half of the roadway must be left clear at all times.

The Contractor must remove any stored materials/equipment from the project street(s), as directed by the Engineer, within forty-eight (48) hours notice at no additional cost to the City. Payment for compliance with such a directive shall be deemed included in the unit price bid for this “Maintenance of Site” item.

(C) ILLUMINATION OF BUILDING MATERIAL AND EQUIPMENT ON STREETS

Pursuant to Section 19-121 of the Administrative Code of the City of New York, the Contractor's attention is directed to the following:

1. Whenever a permit is issued for any construction material or equipment, the outer surface of such construction material or equipment shall be clearly marked with high intensity fluorescent paint, reflectors, or other marking which is capable of producing a warning glow when illuminated by the headlamps of a vehicle or other source of illumination.

2. Each approved storage area shall have at least one (1) sign identifying the Contractor’s name, Project ID/Name, and the phone number of the Engineer’s Field Office.

3. Violations. Any person who shall violate any of the above provisions, upon conviction thereof, shall be subject to the Criminal penalties pursuant to Section 19-149 of the Administrative Code of the City of New York or Civil penalties pursuant to Section 19-150 of the Administrative Code of the City of New York, or both such fines and imprisonment.

(D) STORAGE WITHIN THE PROJECT LIMITS

The Contractor will not be permitted to store construction equipment, construction material or excavated material within the project limits, except where specifically approved by the Engineer and only under the following conditions:

The Contractor will not be permitted to allow the personal vehicles of his work force to be stored, parked, or to stand within the limits of any designated work area or in "no parking", "no standing", and/or other restricted zones; vehicles so stored, parked, or found standing may be ticketed and/or towed at the owner's expense. This restriction shall exclude Contractor owned vehicles transporting and/or storing specialized equipment and/or materials necessary for the execution of ongoing contract work, as approved by the Engineer. The Contractor shall be responsible for properly notifying his work force of these restrictions.

Payment for traffic control devices such as plastic barrels, barricades, pedestrian steel barricades, and warning signs used to enclose stored materials and equipment within the project limits will be paid for under the appropriately scheduled items; however, when no appropriately scheduled item or items are provided in the bid schedule, the cost of those items shall be deemed included under all scheduled items.

Materials stored on site shall be "Installed in Place" within two (2) consecutive working days of delivery to the job site, unless otherwise specified or permitted by the Engineer. (Construction supervisor will be required to maintain accurate records of all delivery dates.) No material shall be stored on site during construction shutdowns and/or stoppages scheduled to last more than five (5) consecutive working days.

(E) STORAGE OUTSIDE THE PROJECT LIMITS

The Contractor may be permitted to occupy off site street/roadway areas for material storage, subject to their availability and conformance with City wide permitting requirements for storage of materials; however, this neither implies nor guaranties the Contractor the availability and/or approval of any off site street/roadway areas.

Materials and/or equipment must be stored safely and neatly as specified above, with appropriate Maintenance and Protection of Traffic devices separating the storage area from vehicular traffic and pedestrians. Loose materials must be properly and neatly stored. .

No separate payment will be made for providing off site storage site(s) where approved or for providing any traffic control devices used for off site storage, the cost of which shall be deemed included under all scheduled items.

7.13.4. NONCONFORMANCE. No payment will be made under Maintenance of Site for each calendar day during which there are deficiencies in compliance with the foregoing specification requirements, as determined by the Engineer and made evident by the Engineer's failure to sign documents each day approving payment to be made under this item.

The amount of such calendar day non-payment will be determined by dividing the unit price bid per month by thirty (30).

If the Contractor fails to maintain and protect the site, or any portion thereof, adequately and safely for a period of three (3) or more consecutive hours, the Engineer may correct the adverse conditions by any means he deems appropriate, including, but not limited to, "outside services," and shall deduct the cost of the corrective work from any monies due the Contractor. The cost of this work shall be in addition to the nonpayment for site maintenance listed above.

However, where continued nonconformance with the requirements of this specification is noted by the Engineer, and prompt Contractor compliance is deemed not to be obtainable, all contract work may be stopped by direct order of the Engineer, regardless of whether corrections are made by the Engineer as stated in the paragraph above.

Furthermore, in addition to the remedies specified above, in the event the Contractor shall fail to comply, within three (3) consecutive hours after written notice from the Engineer, with the requirements of this contract and the specifications in the matter of providing facilities and services for the maintenance, protection and cleanup of the construction site, the Contractor shall pay to the City of New York, until such notice has been complied with or rescinded, the sum shown per calendar day in Schedule "A", for each instance of such failure, as liquidated damages and not as a penalty, for such default.

Any money due the City of New York under this provision shall be deducted from the amounts due or to become due to the Contractor for work performed under this contract.

7.13.5. MEASUREMENT.

(A) MAINTENANCE OF SITE (LUMP SUM)

Payment will be made by lump sum.

(B) MAINTENANCE OF SITE (PER MONTH)

The quantity to be measured for payment under this item shall be the number of months (to the nearest 1/4 month increment) that the Contractor satisfactorily provides for the Maintenance of Site in accordance with these specifications, including winter shut down, holiday embargo, and other work suspension periods for which the Contractor remains responsible for site maintenance. Measurement for this item shall not begin until actual construction work is started at the site.

7.13.6. PRICE TO COVER.

(A) MAINTENANCE OF SITE (LUMP SUM)

The lump sum price bid for Maintenance of Site shall include the cost of furnishing all labor, materials, plant, equipment, insurance and incidentals required to maintain, protect and clean up the site, all in

accordance with the Contract Drawings, these specifications, and the directions of the Engineer. Payment will be made in proportion to the percentage of actual contract completion. The final payment for this item will be in direct proportion (whether higher or lower) to the final contract value as compared to the original contract value.

(B) MAINTENANCE OF SITE (PER MONTH)

The unit price bid per month for Maintenance of Site shall include the cost of furnishing all labor, materials, plant, equipment, insurance and incidentals required to maintain, protect and clean up the site, all in accordance with the Contract Drawings, these specifications, and the directions of the Engineer.

Where no separate item is provided for this work, the cost thereof shall be deemed to be included under all scheduled items.

Payment will be made under:

Item No.	Item	Pay Unit
7.13 A	MAINTENANCE OF SITE	LUMP SUM
7.13 B	MAINTENANCE OF SITE	MONTH

SECTION 7.14 (VACANT)

SECTION 7.15 - Temporary Wooden Steps

7.15.1. INTENT. This section describes the construction and maintenance of temporary wooden steps.

7.15.2. DESCRIPTION. Under this section, the Contractor shall construct and maintain temporary wooden steps where shown on the Contract Drawings, and shall furnish all labor, materials, plant, equipment and incidentals required to complete the work as specified and to the satisfaction of the Engineer.

7.15.3. MATERIALS. All timber shall be Douglas Fir Grade No. 1, with full depth penetration of wood preservative.

Wood Preservative shall be either water-borne or oil-borne, at the Contractor's option, and shall conform to the following applicable requirements:

Wood Preservative-Water Borne. Water-borne wood preservatives shall be Ammoniacal Copper Arsenite conforming to the requirements of American Wood Preservers' Association Standard P5. Water-borne wood preservatives shall be applied in conformance with American Wood-Preservers' Association Standards C1, C2, C5 and C14. Minimum net retention shall be as required for material in contact with soil.

Wood Preservative-Oil Borne. Pentachlorophenol for pressure treatment shall conform to American Wood-Preservers' Association Standard P8. Oil-borne wood preservative shall be applied in conformance with American Wood-Preservers' Association Standards C1, C2, C5 and C14. The net retention of pentachlorophenol shall be as required for material in contact with soil.

Fasteners, such as nails, shall meet the standard industrial fastener specifications for the intended application, and galvanized in conformance with ASTM Designation A 123.

7.15.4. METHODS. The construction of temporary wooden steps where shown on the Contract Drawings, and all work related thereto, shall be performed in compliance with the details shown on the Contract Drawings and as directed by the Engineer.

All work shall conform with National Design Specifications for Stress Grade Lumber and its Fastenings.

All timber at the site of the work shall be stored in piles on supports at least 12" above the ground surface, and so piled as to prevent warping and to shed water. When required by the Engineer, it shall be protected from the weather by suitable covering. The treated timber shall be close-stacked. The ground under and in the vicinity of all stacks shall be cleared of weeds and rubbish and shall be drained to prevent accumulation of water.

Workmanship shall be first class and only competent carpenters shall be employed. All timber shall be accurately cut and framed to a close fit in such manner that the joints will have even bearing over the entire contact surfaces. No blocking or shimming will be allowed in joints. Timber shall be cut off with a saw; no axe is to be used. Unless otherwise specified, heads of nails and spikes shall be driven with just sufficient force to set the heads flush with the surface of the wood. Deep hammer marks in wood surfaces shall be considered evidence of poor workmanship and sufficient cause for rejection of the pieces affected.

The timber shall be carefully handled, without sudden dropping, breaking of outer fibers, bruising, or penetrating the surface with tools. The timber may be handled with rope slings. Cant hooks, peaveys, pikes, or hooks shall not be used.

Temporary wooden steps shall be maintained for the duration of the contract in a condition safe to the public and satisfactory to the Engineer.

7.15.5. MEASUREMENT. The quantity of Temporary Wooden Steps to be measured for payment shall be the number of linear feet of wood steps actually constructed, measured along the toe of each step, between the limits of payment set at each location by the Engineer.

7.15.6. PRICE TO COVER. The contract price per linear foot for Temporary Wooden Steps shall cover the cost of furnishing all labor, materials, plant, equipment, insurance, and incidentals required to construct and maintain temporary wooden steps where shown on the Contract Drawings, in accordance with the Contract Drawings, the specifications and the directions of the Engineer.

Payment will be made under:

Item No.	Item	Pay Unit
7.15	TEMPORARY WOODEN STEPS	L.F.

SECTION 7.16 - Test Pits

7.16.1. DESCRIPTION. Under this section, the Contractor shall be required to excavate test pits for the purpose of ascertaining the location of proposed catch basins, inlets, and pipe connections to be installed under other contract items; for vault investigation purposes; for locating N.Y.C. Transit facilities; and, for investigation of trolley tracks and their yokes, vaults and structures as directed by the Engineer

All test pits shall be covered with steel plates during non-working hours and uncovered only as required for excavation and inspection work.

7.16.2. METHODS.

(A) GENERAL

Test pits shall be any excavation in sidewalk, pavement, soil, hardpan, weathered rock or other unconsolidated or partially consolidated overburden which has an open cross-sectional area large enough to permit the installation of the proposed inlet, catch basin, or pipe connection and as directed by the Engineer for other subsurface investigation. The maximum depth of each test pit will be to the depth of the proposed catch basin, inlet, or pipe connection to be installed under other contract items. The approximate dimensions of the test pits shall be five feet by six feet for inlets and basins, and four feet by the length of the trench for pipe connections, unless otherwise directed by the Engineer.

(B) EXCAVATION

Excavation of test pits shall be performed in conformance with the requirements of Section 6.02 for Unclassified Excavation, and as modified herein.

Existing pavements and sidewalks to be removed shall be neatly cut along the lines of removal with a saw or other approved equipment which will leave a neat straight joint line along the juncture with subsequently replaced pavement and sidewalk. Where excavation through curbs is required, the existing curbs shall be left in place wherever possible or carefully removed and stored for subsequent resetting in the restoration work. All excavation work for test pits shall be performed using hand tools. Use of hand operated pneumatic and electric jack hammers will be permitted only for breaking pavements and removal of masonry, concrete, and boulders or as otherwise directed by the Engineer. Pavement and sidewalk above the N.Y.C. Transit Authority structures shall be broken by hand where directed by the Engineer.

The Contractor shall be required to excavate all material of whatsoever nature encountered, including large masses of concrete, cemented masonry, and boulders, until the buried utility ducts, foundations, structures, etc. have been exposed as directed by the Engineer.

All materials excavated from each test pit shall be immediately removed from the site by the Contractor.

Test pits shall be excavated at the locations shown on the Contract Drawings for special shallow catch basins and inlets and where directed by the Engineer.

Additional test pits may be required and shall be excavated where and as required by the Engineer. Care shall be taken that no existing utility or structure is broken or damaged. All broken or damaged facilities due to the Contractor's operations shall be immediately repaired or replaced by the Contractor at his own cost, to the satisfaction of the Engineer and the owner of the utility or structure, at no additional cost to the City.

Temporary timber sheeting will be required for depth of pits greater than five (5} feet and may be required for pits of depth less than five (5') feet depending on site conditions. However, the Contractor shall be held accountable and responsible for the sufficiency of all sheeting and bracing used and for all damage to persons or property resulting from the improper quality, strength, placement, maintenance, or removal of the same.

Regardless of the type of excavation protection used, it shall be provided to satisfy the following:

1) Rule 23 of the New York State Industrial Code.
2) To prevent injury to workmen and the public or to avoid damage to existing water and sewer pipes or other structures, or to pavements and their foundations, through caving or sliding of the bank of the excavation.

Should it become necessary as determined by the Engineer, to enlarge the test pit in any dimension after sheeting has been placed, the Contractor shall remove portions of the sheeting as necessary, enlarge the test pit as directed and replace the sheeting without additional compensation for this work, other than for the additional volume of material excavated.

(C) MAINTENANCE OF THE PIT

The excavated test pit shall be maintained free of debris and kept dry by the Contractor in order to permit the inspection of structures and utilities by the Engineer and representatives of the Department. The Contractor shall, upon completion of excavation and inspection each day, immediately backfill the test pit and place a temporary pavement of 4" (unless otherwise specified) Asphaltic Concrete Mixture over the excavated area to meet the existing pavement. Where the Contractor can not complete the required excavation, inspection by the Engineer, and backfilling that same day, he shall be required to provide steel plates to cover the excavation and open the full width of street to traffic during non-working hours as directed by the Engineer, at no additional cost. To assist the Engineer in making his inspection, all labor, ladders, electric lamps, etc., as maybe required, shall be furnished by the Contractor.

At all times when work is being performed and the pits are not covered with steel bridging, the Contractor shall provide construction barricades and maintain traffic as shown on the Contract Drawings and as directed by the Engineer.

(D) BACKFILL

Immediately upon completion of each test pit and when directed by the Engineer, the Contractor shall backfill each test pit, as specified under Section 4.11, to a depth of four (4") inches (unless otherwise specified) below the top of the adjacent existing pavement in the roadway area and to a depth of two (2") inches below the top of the adjacent sidewalk in the sidewalk area.

(E) PAVEMENT AND SIDEWALK RESTORATION

After backfilling each test pit, the Contractor shall cover the filled test pits with adequate steel plates. Steel plates shall be maintained until they are replaced with a temporary pavement or sidewalk placed to match the adjacent grade. In the roadway, the temporary pavement shall consist of four (4") inch thick (unless otherwise specified) asphaltic concrete. In the sidewalk, the temporary sidewalk shall consist of a two (2") inch thick layer of asphaltic concrete.

7.16.3. MEASUREMENT. The quantity of Test Pits to be measured for payment under this item shall be the number of cubic yards of material removed from within the limits of the test pit dimensions as directed by the Engineer. Volume occupied by existing pipes, utility lines, foundation, or other structures remaining within the maximum payment lines will not be deducted from the total volume measured except where the cross sectional area of these facilities exceeds four (4) square feet.

7.16.4. PRICE TO COVER. The unit price bid per cubic yard for Test Pits shall include the cost of all labor, materials, equipment, insurance, and appliances required to excavate test pits, including cutting existing pavement, removal of all materials regardless of their nature; removing and disposing of surplus and unsuitable excavated materials off the site; remove, store, and reset curb when necessary; sheeting and re-sheeting; steel bridging and posting; and furnishing and depositing fill material as required; all in accordance with the Contract Drawings, the specifications and the directions of the Engineer.

Payment for temporary pavement and sidewalk will be made under Item 4.02 CB - Asphaltic Concrete Mixture or 4.02 CA – Binder Mixture. Payment for providing traffic control devices will be made under the appropriately scheduled contract items.

Payment will be made under:

Item No.	Item	Pay Unit
7.16 D	TEST PITS	C.Y.

SECTION 7.17 (VACANT)

SECTION 7.18 - Controlled Low Strength Material (CLSM)

7.18.1. DESCRIPTION. The work consists of mixing and placing Controlled Low Strength Material (CLSM) or Controlled Low Strength Material (CLSM) with slag/fly ash (fly ash may not be used without the written approval of the NYCDDC's Assistant Commissioner of Infrastructure Design) at the locations shown on the Contract Drawings or where ordered by the Engineer.

7.18.2. MATERIALS.

(A) GENERAL

The Contractor shall provide CLSM containing aggregate, cement and water. It may also contain, at the Contractor's option, slag/fly ash* or chemical admixtures in any proportions such that the final product meets the strength and flow consistency requirements included in this specification.

Materials used in this work shall conform to the following requirements of the NYS Department of Transportation, Standard Specifications:

Portland Cement, Type 1 or Type 2:	§ 701-01	
Aggregates:	§ 703-01	
Chemical Admixtures:	§ 711-08	(The mix may include high air generators manufactured for CLSM)
Fly Ash*:	§ 711-10	(Waive the loss on ignition requirement)
Slag:	§ 712-12	
Water:	§ 712-01	

---

* *The use of fly ash shall be in strict compliance with the requirements of **Subsection 7.18.3(B)**, herein, and the Contractor must obtain written approval from NYCDDC's Assistant Commissioner of Infrastructure Design prior to its use.*

(B) TESTS AND CONTROL METHODS

Certification from an approved testing laboratory that the CLSM will have a 28 day compressive strength between 40 PSI and 150 PSI shall be furnished by the Contractor and provide to the Engineer prior to delivery of any materials.

Hardened mixtures shall reach a minimum compressive strength of 15 PSI within 48 hours; a long term density between 90 to 110 PCF; and, a minimum of 20% and a maximum of 40% Air, when measured in accordance with ASTM D 6023. In order to allow for future manual excavation the 28 days density shall be 90 to 110 PCF.

Design the CLSM mix so that it sets within the time stated in the contract documents. If no set time is required by the Department, the set time shall conform with the Maintenance and Protection of Traffic scheme and requirements of the project.

The CLSM shall have a minimum diameter spread of 8" as determined by the following procedure to be performed by the Engineer:

Fill a hollow plastic or metal cylinder 8" in length and 3" inside diameter with the CLSM and strike off the surface.

Raise the flow cylinder in a continuous motion without rotation.

Immediately measure the spread of the CLSM along two diameters which are perpendicular to each other.

The Contractor shall cast four (4) specimens (cylinders) for each batch in accordance with the Department's Materials Method 9.2 - Field Inspection of Portland Cement Concrete, and deliver them to a DDC's Quality Assurance (QA) approved Material Testing Laboratory within seven days of the pour date for evaluation.

For each 50 Cubic Yard or portion thereof, the following Field Testing shall be performed to confirm the material conformance with the approved design mix:

ASTM D 6023	Unit Weight, Yield Cement Content & Air Content
ASTM D 5971	Sampling Freshly Mixed CLSM
ASTM D 4832	Preparation and Testing of CLSM
ASTM D 6103	Flow Consistency of CLSM

Prior to proceeding with subsequent construction operations, either one of the following Field Tests shall be performed on the surface of the in-place CLSM to estimate its surface bearing value and its suitability for load application.

ASTM D 6024	Ball Drop on CLSM
ASTM D 3441	Cone and Friction Cone Penetration Tests

A minimum of three (3) tests shall be performed for each 200 Square Feet or portion thereof, and evaluated against the following criteria:

ASTM D 6024	Inspect the indentations for visible water or sheen brought to the surface by the dropping action of the ball.

If the diameter of the indentation is equal or less than 3 inches, than the CLSM is suitable for load application, provided that:

a. The surface looks similar to that before the test with the exception of the indentation, and;
b. There is no visible surface water or sheen visible in the indentation.

ASTM D 3441	The average value of the three (3) tests shall be not less than Four (4) Tons/Square Foot.

The minimum value per individual test shall not be less than Three (3) Tons/Square Foot.

7.18.3. CONSTRUCTION DETAILS.

(A) GENERAL.

The Contractor shall provide all equipment for this work subject to approval of the Engineer. Mix the materials at a stationary mixing plant which is either a continuous or a batch type plant, designed to accurately proportion either by volume or by weight, so that when the materials are incorporated in the mix, a thorough and uniform mix will result.

The mix may be transported in open haul units provided the material is placed within 30 minutes of the end of mixing. Use a rotating drum unit capable of 2 - 6 rpm to transport material that cannot be placed within 30 minutes after the end of mixing. In cases where placement cannot take place within 30 minutes from the end of mixing, the material shall be transported in a rotating drum capable of 2 – 6 rpm.

Provide a mixer capable of mixing CLSM that has the specified compressive strength and flow consistency. Mix all components so as to produce a uniform product. For work involving CLSM quantities of less than two (2) cubic yards, the Engineer may permit the Contractor to use a small construction mixer.

Narrower trench widths can be employed when using CLSM due to the self-compacting properties of the material. Construction personnel and equipment are not required to be in the trench for compaction operations. Refer to the current NYSDOT Metric Standard Sheet No. M204-1, issued under EB 02-003, for Controlled Low Strength Material (CLSM) Installation Details for Circular and Elliptical Corrugated Metal Pipes, Structural Plate Pipes and Pipe Arches, and Reinforced Concrete and Other “Rigid” Pipes for additional requirements.

For installations that require construction personnel to temporarily occupy the trench, the Contractor shall follow all OSHA requirements.

(B) FILL AND BACKFILL AT STRUCTURES, CULVERTS, PIPES, CONDUITS AND DIRECT BURIAL CABLES.

The Contractor shall place the CLSM using a method approved by the Engineer, in accordance with the appropriate NYSDOT Standard Sheet for additional guidance on the use of CLSM as backfill material.

When placing CLSM for pipe backfill, discharge the material onto the top of the pipe at the center.

Do not place CLSM in contact with aluminum pipe, including connections, fixtures, etc., unless the aluminum has been coated with an approved primer.

Do not place CLSM containing fly ash in contact with cast iron or ductile iron pipes, fittings or appurtenances, or in contact with steel reinforcement bars, wires, metal conduits, etc.

CLSM should be kept encapsulated with soil, as it is highly erodible and disintegrates when left exposed to the environment

In situations where CLSM is used as backfill around lightweight pipe, take precautions to counteract the pipe’s buoyancy.

7.18.4. MEASUREMENT. The quantity to be measured for payment shall be the number of Cubic Yards of satisfactorily placed CLSM computed between the payment lines shown on the contract documents or from payment lines established in writing by the Engineer.

A deduction shall be made for pipes (based on nominal diameters) and other payment items when the combined cross-sectional area exceeds one (1) sq. ft.

Unless otherwise shown, no deduction will be made for the cross-sectional area of an existing facility.

No additional quantity shall be measured for payment to make up losses due to foundation settlement, compaction, erosion, or any other cause.

Cross sectioning, for the purpose of determining quantities for payment, shall be employed only where payment lines are not shown on the contract documents and drawings, and cannot be reasonably established by the Engineer.

7.18.5. BASIS OF PAYMENT. The unit price bid shall include the costs of furnishing all labor, materials, equipment, insurance, and incidentals necessary to complete the work, except where specific costs are designated or included in another pay item of work.

Payment will be made under:

Item No.	Description	Pay Unit
7.18 CM	CONTROLLED LOW STRENGTH MATERIAL (CLSM)	CUBIC YARD

SECTION 7.19 - Load Transfer Joint

7.19.1. INTENT. This section describes the construction of Load Transfer Joints.

7.19.2. DESCRIPTION. Load Transfer Joints shall consist of the installation of steel dowels to be placed between existing concrete base for pavement and new concrete base for pavement to be placed under another contract item.

7.19.3. MATERIALS.

(A) DOWELS shall be of the types, sizes and placement shown on the Contract Drawings. Epoxy coating of bars shall be furnished, applied, sampled, tested, repaired, handled and stored in accordance with the requirements of **Section 709-04, EPOXY-COATED BAR REINFORCEMENT**, of New York State Department of Transportation Standard Spcecifications for Construction and Materials. Acceptance of epoxy coated joint tie bars and dowels shall be based on: the names and locations of the reinforcing bar manufacturer, the epoxy reinforcing bar applicator, and the epoxy coating material appearing on the NYS Department of Transportation's Material and Equipment Approved List; and, certifications from the steel manufacturer, the coating manufacturer, and the coating applicator as to their compliance with these specifications. These certifications shall accompany the material delivered to the job site.

(B) GROUT shall be a quick-setting, non-shrinking mortar of a type approved by the Engineer. It shall contain no ferrous metals, nor rust or corrosion promoting agents. The material shall show no shrinkage on setting but may exhibit slight expansion of no more than 0.002 inch per linear inch. The compressive strength (two inch cubes cast from this material) shall have a minimum strength of 4,500 psi at age one (1) hour and 5,000 psi at age twenty-four (24) hours.

7.19.4. METHODS. The load transfer joint shall be constructed as shown on the Contract Drawings.

Holes shall be drilled into the existing concrete base at the longitudinal spacing and depth shown on the Contract Drawings for the placement of dowel bars. A frame, as approved by the Engineer, must be used to hold the drill in a horizontal position at the correct height and provide the means to force the bit into the concrete by lever action.

Dowel bars shall then be grouted into the holes drilled in existing slab. Care must be taken to insure good coverage of the grout in the hole. The longitudinal axis of the dowel must be perpendicular to the joint line and parallel to the surface of the pavement slab when the grout has set. Tolerance of placement shall be ±1/4" inch from end to end of bar.

Concrete shall be furnished and placed under the appropriate "Concrete Base for Pavement" item.

After the concrete base for pavement has hardened, all joints shall be cleaned of all loose and undesirable materials before sealing the joints with the reflective cracking membrane under Item 6.91.

7.19.5. MEASUREMENT. The quantity to be measured for payment shall be the number of linear feet of Load Transfer Joint constructed, measured in place, in accordance with the Contract Drawings, the specifications, and the directions of the Engineer.

7.19.6. PRICE TO COVER. The contract price bid per linear foot of Load Transfer Joint shall cover the cost of all labor, materials, plant, equipment, insurance, and incidentals required to furnish and install the load transfer expansion joint complete in place, including all steel dowel bars, grout, etc., to furnish such samples for testing as may be required and to maintain the pavement in good condition as specified in Section 5.05, and completing the work in accordance with the Contract Drawings, the specifications and the directions of the Engineer.

The cost of concrete placed at the joint shall be paid for under the appropriate "Concrete Base for Pavement" item.

Payment will be made under:

Item No.	Item	Pay Unit
7.19	LOAD TRANSFER JOINT	L.F.

SECTION 7.20 - Reset Basement Access

7.20.1. INTENT. This section describes the work to be done in new sidewalk areas to reset existing access doors and hatches leading to the basement areas of adjacent buildings.

7.20.2. DESCRIPTION. The work shall consist of the removal, storage and resetting of existing access doors and frames to the new sidewalk elevations, including any required alterations to the supporting walls and all other walls under the frame. If, in the opinion of the Engineer, the existing doorway is in an unsafe physical condition, it shall not be reset and a steel safety closure plate shall instead be placed over the doorway opening to maintain the security of the basement.

7.20.3. MATERIALS. The existing frame and doors or hatches shall be reused wherever possible.

Brick shall meet the requirements for manhole brick, ASTM C 32, Grade MS.

Concrete shall be Class B-32, Type IIA;
Cement shall be Type II Portland;
Sand shall be Type 1A;
Coarse Aggregate shall be Type 1, Grade B, or Type 2 Size No. 57;
Air Entraining Agent shall be as approved and added at the time the concrete ingredients are mixed with water.

Steel Safety Closure Plate shall be capable of supporting pedestrian loading over the required span and shall have a safety tread anti-slip finish acceptable to the Engineer.

All other unspecified materials required for the work shall be as approved by the Engineer.

7.20.4. METHODS. The Contractor shall not remove or in any way disturb an existing basement access doorway or hatch until approved by the Engineer.

The Contractor shall, to the satisfaction of the Engineer, indicate at each basement access the locations of new sidewalk elevations. When directed by the Engineer that a specific basement access is to be reset, the Contractor shall progress the work generally as follows:

(A) Carefully remove the existing doors and/or hatch covers and frame. Removal shall be done in a manner approved by the Engineer and shall not damage the existing material to be reused. If, in the opinion of the Contractor, the existing frame and doors are of a physical condition not permitting damage-free removal or resetting, this must be made known to the Engineer.

(B) The frame shall be cleaned of all loose concrete and other materials as may be existent, to the satisfaction of the Engineer.

(C) The Contractor shall store the frame and doors in a secure location.

(D) All existing walls around the opening shall be broken down or built up the minimum height required to meet the new sidewalk elevations, and any required frame pocket, anchors and supports shall be provided.

(E) The existing frame and doors shall be reset on the rebuilt walls to the satisfaction of the Engineer.

(F) At all times, the Contractor shall maintain the security of the basement area in a manner approved by the Engineer.

When the work of removing, rebuilding and resetting of the existing doors extends beyond the working period and the entrance is left in an unfinished open state until the next working period, the Contractor shall do the following and as directed by the Engineer:

(A) At sidewalk level, the area shall be fully enclosed and/or barricaded to prevent accidental entry by pedestrian traffic.

(B) At basement level, the entrance shall be sealed against entry by the construction of a corrugated metal enclosure. When directed by the Engineer, the enclosure provided shall be constructed so as to permit authorized entrance to the basement area.

(C) During all non-working periods that the basement entrance remains incomplete, the Contractor shall provide continuous Security Guard Service.

When directed by the Engineer, due to the original condition of the frame and doors or due to other conditions, the Contractor shall remove and dispose of the existing frame and cover, rebuild the walls to the proper elevations and then place a steel safety closure plate over the entire basement entrance to maintain security of the area. The steel safety closure plate shall be securely held in place in a manner approved by the Engineer, which will permit only authorized access to the basement areas.

7.20.5. MEASUREMENT. The quantity of Reset Basement Access to be measured for payment shall be the perimeter in linear feet of the doorway or hatch reset, measured along the outside of the frame at the elevation of the top of new sidewalk. Any basement access reset without the prior approval of the Engineer will not be measured for payment.

Steel Safety Closure Plate installed at approved locations, in conformance with the orders of the Engineer, will be measured for payment under Item 6.22 F, Additional Hardware. Closures required due to the need for maintaining security during the work of this Section will not be measured for payment.

Resetting of vault covers, manhole covers, etc., owned by private utility companies will not be a part of the work of this Section and will not be measured for payment.

7.20.6. PRICE TO COVER. The contract price per linear foot for Reset Basement Access shall cover the cost of all labor, materials, plant, equipment, insurance, and incidentals needed to remove, clean, store and rebuild supports, maintain security (including enclosures and Security Guard) and reset the basement access doors as directed by the Engineer. Any damage to the frames, doors or any part thereof caused by the Contractor's operations shall be replaced to the satisfaction of the Engineer at no additional cost to the City.

Payment will be made under:

Item No.	Item	Pay Unit
7.20	RESET BASEMENT ACCESS	L.F.

SECTION 7.21 (VACANT)

SECTION 7.22 - Slope Protection

7.22.1. INTENT. This section describes the work of providing slope protection throughout the project where there are sloped areas to be graded steeper than 1 vertical on 2 horizontal. These slopes must be protected from erosion until such time as the topsoiled and seeded areas can permanently establish themselves.

7.22.2. DESCRIPTION. The work under this item shall consist of preparing the ground surface, furnishing and placing jute mesh on designated areas, and caring for the work as specified.

7.22.3. MATERIALS. The material to be used for slope protection shall meet the following requirements:

(A) JUTE MAT

Jute mat shall be cloth of a uniform plain weave of undyed and unbleached single jute yarn, 48 inches plus or minus 1 inch in width and weighing an average of 0.9 pounds per linear yard of cloth with a tolerance of plus or minus 5 percent, with approximately 60 warp ends per yard width of cloth and forty weft ends per linear yard of cloth. The yarn shall be of a loosely twisted construction having an average twist of not less than 1.6 turns per inch and shall not vary in thickness by more than one half its normal diameter.

(B) STAKES

Stakes for pinning mats shall be approximately 1" by 3" lumber cut in a triangular shape with a minimum length of 18 inches of sound, unsplit wood with no defects that may impair their usefulness.

7.22.4. METHODS.

(A) TIME OF PLACEMENT

The slope protection material shall be applied as soon as possible but not more than 24 hours after application of topsoil. In the event of impending inclement weather, rain, high winds, or other adverse conditions, the Contractor shall be directed to place the slope protection immediately after the topsoil operations. At no time shall the jute mesh be placed on frozen ground. Any erosion or damage due to the Contractor's tardiness or improper application of slope protection shall be repaired, as directed by the Engineer, at the Contractor's own expense.

(B) GROUND PREPARATION AND INSTALLATION

Areas to receive jute mesh shall be shaped, graded, and compacted to the lines and grades shown on the Contract Drawings or as directed by the Engineer.

Jute mesh shall be placed without stretching on the freshly prepared surface so that it lays loosely on the soil and in contact with the soil at all points and then rolled or tamped firmly into the soil surface. The upper end of each roll of jute shall be turned down and buried to a depth of 6 inches with the soil firmly tamped against it.

Check slots shall be constructed at 50 ft. intervals unless otherwise approved. The construction procedure shall consist of placing a fold of jute 6 inches vertically into the ground and tamping soil firmly against it.

Jute mesh shall be placed so that all edges shall have a minimum overlap of 6 inches. The ends of rolls shall be placed with the upgrade section on top.

Jute mesh shall be held tightly to the soil by wooden pegs driven firmly into the ground. Wooden pegs shall be spaced not more than 3 feet apart along the sides of the jute mesh and not more than 1 foot apart at roll ends, check slots, and other critical areas as determined by the Engineer.

Areas of jute mesh shall be fertilized and seeded in accordance with the specifications for the seeding item in the contract.

(C) CARE AND REPAIR

The Contractor shall care for the areas of jute mesh installation until acceptance of the contract. Such care shall consist of providing approved warning signs or barricades for protection against traffic, and repairing areas damaged by vehicles, erosion, fire or other causes, to re-establish the grade and conditions of the area as specified.

In addition, until acceptance of the contract, grass shall be moved to a height of three inches when growth reaches six inches or when the growth tends to smother seedlings or as directed.

7.22.5. MEASUREMENT. The quantity to be measured for payment shall be the number of square yards of the surface area acceptably treated with slope protection.

7.22.6. PRICE TO COVER. The contract price for Slope Protection shall be the unit price per square yard and shall cover the cost of all labor, material (including stakes), equipment, excavation and backfill for anchorage, insurance, and all other incidentals required to complete the work in accordance with the Contract Drawings, specifications, and directions of the Engineer.

The cost of furnishing and placing of topsoil and seeds with fertilizer will be paid for under the topsoil and seeding items in the contract.

Payment will be made under:

Item No.	Item	Pay Unit
7.22	SLOPE PROTECTION	S.Y.

SECTIONS 7.23 THRU 7.29 (VACANT)

SECTION 7.30 - Removal of Tracks

7.30.1. DESCRIPTION. Under this section, the Contractor shall be required to remove and dispose of existing trolley tracks, which may include, but not be limited to, rails, creosoted ties, yokes, "I" beams, concrete ducts, main conduit, rail and yoke footings and foundations where they exist, all of which are outside the limits of roadway vaults, in accordance with the Contract Drawings, the specifications, and the directions of the Engineer. Each set of tracks shall include a pair of rails; associated electrical ducts, ties and tie foundations and/or yokes spaced approximately five (5') feet apart and their concrete foundations. The existing rail size and weight is indeterminate.

The removal of trolley tracks within the limits of roadway vaults shall be paid for under Item 7.31 A, Demolition of Roadway Vaults.

7.30.2. METHOD. The Contractor shall be required to excavate and dispose of trolley tracks which may include, but not be limited to, rails, creosoted ties, yokes, "I" beams, concrete ducts, main conduit, rail and yoke footings and foundations. The work shall also include any cutting of trolley tracks and their appurtenances as required to accommodate their removal. Width of excavation shall be as shown on the Contract Drawings. Length of excavation shall be limited to length of track located within the pavement designated to be reconstructed. Depth of excavation shall be to the bottom of existing track foundation or to the bottom of the proposed street concrete base, whichever is lower, unless otherwise specified.

A section of existing trolley rail shall be exposed for a more accurate determination of existing conditions. The method of splicing rails, the method of fastening rails to ties or yokes, and the materials and dimensions of the rails and yokes shall be noted. A written sequence of operations shall be submitted by the Contractor for approval of the Engineer.

All material removed hereunder shall become the property of the Contractor, unless otherwise provided, and shall be disposed of away from the site by him.

7.30.3. MEASUREMENT.

(A) PER CUBIC YARD

The quantity to be measured for payment shall be the number of cubic yards of track and their appurtenances actually removed and disposed of, inclusive of rails, ties, yokes, concrete ducts, main conduit, rail and yoke foundations, measured within the limits shown on the Contract Drawings.

(B) PER LINEAR FOOT

The quantity to be measured for payment shall be the number of linear feet of tracks removed and disposed of, inclusive of rails, ties, yokes, concrete ducts, main conduit, rail and yoke foundations, measured along the center line of each pair of rails.

7.30.4. PRICES TO COVER. The contract prices bid per linear foot or per cubic yard of track removed shall cover the cost of all labor, plant, material, equipment, insurance, and necessary incidentals required for completing the work in accordance with the Contract Drawings, the specifications, and the directions of the Engineer.

Payment will be made under:

Item No.	Item	Pay Unit
7.30 A	REMOVAL OF TRACK	C.Y.
7.30 B	REMOVAL OF TRACK	L.F.

SECTION 7.31 - Demolition of Roadway Vaults and Truss Blocks

7.31.1. WORK TO INCLUDE. Under this section, the Contractor shall be required to demolish, remove, and dispose of concrete, steel rails, concrete reinforcement, brick walls, and debris in roadway vaults and concrete and reinforcement in truss blocks for curved sections of trolley tracks as indicated on the Contract Drawings or directed by the Engineer.

7.31.2. GENERAL.

(A) DISPOSAL

The Contractor shall remove all debris from within the vaults. No debris arising from the demolition of the vaults or otherwise deposited therein will be allowed to remain in the vaults.

Material resulting from the demolition will not be accepted as fill. All materials resulting from demolition operations or required to be excavated in connection with such operations, except as otherwise provided or directed, shall be disposed of by the Contractor away from the demolition site and the site of the contract work. Said materials shall not be dumped, placed, stored or disposed of within the limits of any existing or projected public street or road. The burning of debris or other demolition materials will not be permitted.

(B) DAMAGES

The Contractor shall be responsible for all damages resulting from and due to his demolition operations. No additional payment or compensation will be made or allowed the Contractor for costs incurred for repairs and replacements required to satisfactorily remedy the aforesaid damages.

(C) PROTECTION OF UTILITIES

The Contractor shall seal or plug all storm sewers leading from the structures to be demolished. The Contractor shall maintain and preserve all utilities traversing the structures to be demolished.

7.31.3. METHODS. Within the limits shown or directed, all structures and appurtenances shall be completely removed except that walls shall be removed to a depth of two (2') feet below new subgrade of pavement. Vault floors shall be broken up to prevent accumulation of water. No piece of masonry or concrete when broken, shall exceed eighteen (18") inches in its greatest dimension.

All material demolished hereunder shall become the property of the Contractor, unless otherwise provided, and shall be disposed of away from the site by him, including all debris of every kind which has accumulated in the vaults.

7.31.4. MEASUREMENT. The quantity to be measured for payment under Item 7.31 A, Demolition of Roadway Vaults, shall be the total number of cubic yards of material demolished, removed, and disposed of from the specified vaults, measured in place before demolition.

The quantity to be measured for payment under Item 7.31 B, Demolition of Trolley Track Truss Blocks, shall be the total number of cubic yards of material demolished, removed, and disposed of from the specified truss blocks, measured in accordance with Section 4.11.7.(B), Rock Excavation.

7.31.5. PRICES TO COVER.

(A) DEMOLITION OF ROADWAY VAULTS

The contract price bid for Demolition of Roadway Vaults shall be a unit price per cubic yard and shall cover the cost of all labor, plant, equipment, insurance, and necessary incidentals required to demolish, remove, and dispose of concrete, steel rails, concrete reinforcement, brick walls, and debris in roadway vaults in accordance with the Contract Drawings, the specifications, and the directions of the Engineer.

(B) DEMOLITION OF TROLLEY TRACK TRUSS BLOCKS

The contract price bid for Demolition of Trolley Track Truss Blocks shall be a unit price per cubic yard and shall cover the cost of all labor, plant, equipment, insurance, and necessary incidentals required to demolish, remove, and dispose of concrete and reinforcement in trolley track truss blocks in accordance with the Contract Drawings, the specifications, and the directions of the Engineer.

Backfill for Demolished Roadway Vaults will be provided for under the item for "Fill, Place Measurement", unless otherwise specified.

Payment will be made under:

Item No.	Item	Pay Unit
7.31 A	DEMOLITION OF ROADWAY VAULTS	C.Y.
7.31 B	DEMOLITION OF TROLLEY TRACK TRUSS BLOCKS	C.Y.

SECTIONS 7.32 THRU 7.33 (VACANT)

SECTION 7.34 - Tow Truck Service

7.34.1. DESCRIPTION. Under this item, the Contractor shall provide tow service for any disabled vehicles within the contract limits that affects the flow of traffic during the hours specified elsewhere in the contract documents or directed by the Engineer. The intent is to remove the disabled vehicle to a location off the traveled way.

7.34.2. MATERIALS. The Contractor shall provide tow trucks capable of handling a gross weight of 18,000 pounds. Each truck shall be equipped with an amber cab mounted flashing light, two-way radio capable of operating on an assigned frequency, tow rig, cushioned bumper and rear pintle hooks.

7.34.3. SERVICE REQUIREMENTS. The Contractor, in providing Tow Truck Service, shall utilize only tow trucks and tow truck drivers licensed by the New York City Department of Consumer Affairs as per City Code.

7.34.4. CONSTRUCTION DETAILS. Stationed Towing Service:

A. The Tow Truck Service shall be stationed at the location specified by the Engineer. The Tow Truck shall expedite removal of disabled vehicles and shall be on duty during periods specified elsewhere in the contract documents.

B. The Tow Truck Service may also be required to provide towing service during other periods of anticipated heavy traffic flow as determined by the Engineer. Notification requiring this service shall be given to the Contractor 24 hours in advance.

Disabled vehicles shall be towed to the nearest acceptable location approved by the Engineer. The location shall be selected such that the operators of the disabled vehicles may readily obtain or arrange to obtain further service at their own expense. Upon delivery of the disabled vehicle to the approved location, the tow truck shall be required to immediately return to its assigned duty station thus providing maximum towing coverage during the specified duty hours. The operators of disable vehicles shall not be charged for the Towing Service provided under this item.

In the case of serious vehicular accidents, the tow truck must not remove the disabled vehicle or vehicles until authorized by the police or by the Engineer.

7.34.5. MEASUREMENT. The quantity to be measured for payment shall be the number of hours that a tow truck and operator are on duty as ordered by the Engineer.

7.34.6. PRICE TO COVER. The unit price bid per hour shall include the cost of all labor, insurance, tools, equipment, materials, insurance, and necessary incidentals to provide the towing service. The hourly rate price bid shall include the cost of a fully functional tow truck and operator.

No payment will be made for any hour of required duty that the tow truck is not on duty.

Should the Contractor not provide the specified Tow Truck during the required hours of duty, the Engineer shall arrange for towing of all disabled vehicles from the project site to an approved location and such towing charges shall be deducted from monies owed to the Contractor by the City.

Payment will be made under:

Item No.	Item	Pay Unit
7.34 H	TOW TRUCK SERVICE	HOUR

SECTION 7.35 (VACANT)

SECTION 7.36 - Pedestrian Steel Barricades

7.36.1. INTENT. This section describes the work of providing temporary pedestrian steel barricades between pedestrian and construction work areas.

7.36.2. DESCRIPTION. The work shall consist of furnishing, maintaining, relocating, and removing temporary pedestrian steel barricades in sidewalk areas as shown on the Contract Drawings or where otherwise directed by the Engineer.

7.36.3. MATERIALS. Temporary pedestrian steel barricades shall consist of pedestrian barricade units having a geometry similar to that shown on the New York City Department of Transportation's Standard Details of Construction Standard Drawing No. H-1014 and complying with the following requirements:

Size: For straight runs of barricade each unit shall range in length from seven (7) to nine (9') feet.
For curved runs of barricade each unit shall range in length from three (3) to four (4') feet.
Height of barricades shall range from 41 to 45 inches; however, all barricades in the project shall be of the same height.

Components: Outside perimeter (main frame) shall be of 1-1/2 inch O.D., 16 gauge (minimum) steel tubing.
Inside vertical members shall be of 5/8 inch O.D., 16 gauge (minimum), steel tubing extend into the main frame tubing, both top and bottom, for a minimum of 3/4 inch. The spacing between inside vertical members shall not exceed 4-3/4 inches.

Weight: Each unit shall not exceed 60 pounds in weight.

Interlock: Each barricade unit shall be equipped with interlocking ends for attachment to adjacent units for stability.

Feet: Flat steel feet, of sufficient dimension for stability, shall be welded to each end of barricade. These feet shall be capable of accommodating stabilizing weights to be placed upon them in order to secure barricades in place.

Finish: Fabricated steel barricades shall be hot dipped galvanized, then prime coated with a paint compatible with galvanized steel surface, and then surface coated with a safety orange colored paint compatible with the prime coating.

7.36.4. METHODS. Temporary pedestrian steel barricade units of the various sizes required shall be furnished to the site, complete, ready to use. All units shall be in good condition and acceptable to the Engineer.

The Contractor shall install the barricades by placing them where shown on the Contract Drawings or where otherwise directed by the Engineer. Adjacent units shall be interlocked. Weights (sandbags, concrete blocks, etc.) shall then be placed, as directed, on each work area side footing only, for stability. The minimum number of interlocked barricade units in a given run shall be two, unless otherwise approved by the Engineer. Where less than three units are required and approved by the Engineer,

additional measures shall be taken by the Contractor to stabilize the shorter length of interlocking barricade and prevent overturning.

At corners, three (3') to four (4') foot long units shall be used to form smooth curved runs of barricade.

Contractor shall continuously maintain the temporary pedestrian steel barricades, where shown on the Contract Drawings or directed by the Engineer, until ordered by the Engineer to remove the barricades at the completion of a work stage. Should a unit or units of barricades become damaged or otherwise unacceptable to the Engineer, the Contractor shall replace said units within twenty-four (24) hours of notice by the Engineer, at no additional cost to the City.

7.36.5. MEASUREMENT. The quantity to be measured for payment shall be the number of linear feet of temporary pedestrian steel barricades constructed and placed, complete, based upon the summation of the lengths of the individual units so constructed and placed.

Payment will be made for only the initial installation at any location. Whenever pedestrian steel barricades are moved to a new location, as required by the Contract Drawings or directed by the Engineer, payment will be made in the same manner as if it were an initial installation. Minor movement of the temporary pedestrian steel barricades or rearrangement within a work area will not be considered as a movement to a new location and will not entitle the Contractor to additional payment.

No payment will be made: for non-interlocked units of barricade; for barricade units greater than four (4') feet in length used in corner quadrants; for movements of barricades made for the Contractor's convenience; for movement of barricades at a given location at the end of a work period and subsequent replacement at the same location at the beginning of the next work period; for movement of barricades at a given location during a work period and subsequent replacement at the same location during the same work period; or for the interchanging of barricades between initial installations.

7.36.6. PRICE TO COVER. The contract price bid per linear foot for temporary Pedestrian Steel Barricades shall cover the cost of furnishing all labor, materials, plant, equipment, insurance, and necessary incidentals required to furnish, install, maintain, relocate, and remove temporary pedestrian steel barricades, complete with weights for stability, in accordance with the Contract Drawings, the specifications, and the directions of the Engineer.

Where there is no scheduled item for temporary Pedestrian Steel Barricades, the cost of furnishing, installation, maintenance, relocation, and subsequent removal of Temporary Pedestrian Steel Barricades as required shall be deemed included in the unit price bid for the Maintenance and Protection of Traffic Item.

Payment will be made under:

Item No.	Item	Pay Unit
7.36	PEDESTRIAN STEEL BARRICADES	L.F.

SECTIONS 7.37 AND 7.87 (VACANT)

SECTION 7.88 - Rodent and Waterbug Pest Control

7.88.1. DESCRIPTION. The Contractor shall provide all labor, materials, plant and equipment, and incidentals required to survey and monitor rodent activity and control any infestation or outbreak of rodents and waterbugs (American cockroaches) within the project limit.

7.88.2. MATERIALS. All materials shall be approved by the New York State Department of Environmental Conservation and comply with the New York City Health Code for the intended usage.

Rodenticide weatherproof bait blocks shall be multiple dose anticoagulants such as Chlorophacinone or Dephacinone, or single feed rodenticides such as ContraMeal, ContracBait block, Quintox pellets or TalonG pellets, or an approved equivalent.

Tamper proof bait station boxes shall be designed to exclude other mammals and shall be used with poisoned bait to attract rats. Information on "tamper proof bait station boxes" is available from the NYC Bureau of Regulatory & Environmental Health Services, Pest Control Office (718-956-7103/4).

Live traps shall be of proper dimensions for trapping rats and shall <u>not</u> be used with poisoned bait.

Insecticide bait shall be a residual type such as phenol methyl carbamate (2%) bait or an approved equivalent.

7.88.3. PERSONNEL. The exterminator company and personnel performing survey and monitoring work shall be independent from the exterminator company and personnel performing rodent and waterbug baiting work. All pest control personnel employed by each exterminator company must be supervised by an exterminator licensed in categories 7A & 8. The Contractor shall submit the names and license credentials of the two exterminator companies to the Engineer for approval prior to the commencement of any work under this section.

7.88.4. METHODS. Application and dosage of all materials shall be done in strict compliance with the manufacturer's recommendations. All baiting and/or live trapping work shall be performed in the presence of the Engineer, without which no payment will be made under this Section.

(A) GENERAL

The Contractor's construction activity is expected to disturb any established rodent and/or waterbug population that may exist within the project limits, possibly causing their dispersion. The Contractor shall take all appropriate action to eliminate and/or control these populations within the construction corridor: the construction corridor shall be defined as being the full width of streets under this Contract and intersecting streets up to the limits of construction, from building line to building line, excluding buildings and under sidewalk building vaults.

Under the Maintenance of Site requirements for this Contract, any unsanitary conditions, such as uncollected garbage or debris, resulting from the Contractor's activities which will provide food and shelter to the resident rodent population shall be corrected by the Contractor immediately after notification of such condition by the Engineer. Non-compliance shall be subject to the application of the "Nonconformance" provisions of the Item for Maintenance of Site, and no payment will be made for any additional application of rodenticide or insecticide needed to control resultant infestations.

(B) SURVEY AND MONITORING WORK

(1) <u>Prior to Construction</u> - The Contractor's designated agent shall execute a survey of the project area and estimate the level of rodent (Norway rat, House mouse) infestation and the waterbug population within the construction corridor. An appropriate sample of utility manholes (sewer, electrical, telephone, etc.) and catch basins should be opened and surveyed to the satisfaction of the Engineer.

(2) During Construction - The Contractor shall monitor the rodent activity, through trapping (snap or glue traps or live traps) or fecal count methods, and the waterbug population every week during construction activity or as otherwise directed by the Engineer.

(C) RODENT CONTROL WORK

(1) Wetlands, Woodlands and Areas Within Seventy-five (75') feet of a Stream. In wetlands, woodlands and areas adjacent to a stream, special precautions must be taken to protect water quality and to ensure the safety of other wildlife. To prevent poisoned bait from entering streams, no poisoned bait shall be used in areas within seventy-five (75') feet of either streambank. Live traps must be used in these seventy-five (75') feet buffer zone areas and within wetland and woodland areas.

(2) Outside Wetland Areas, Woodland Areas and Beyond Seventy-five (75') feet of a Stream. In areas outside the seventy-five foot zone of protection adjacent to streams, and areas outside wetlands and woodlands, tamper proof bait stations with poisoned bait shall be established during the period of construction and any consumed or decomposed bait shall be replenished as directed.

Rodent control shall be achieved in two stages as follows:

Stage I. At least one month prior to initiation of the construction work, and periodically thereafter, live traps and/or rodenticide bait in tamper proof bait stations, as directed above, shall be placed at locations [example-burrows, utility manholes (sewer, electrical, phone, etc.), and catch basins] that are inaccessible to pets, human beings, children and other non-target species, particularly wildlife (example-birds) in the construction corridor.

Stage II. During Construction - Infested sites shall be baited and/or rebaited as required and live traps shall be collected and replaced as required, the rates of which shall be determined by the Engineer in consultation with the exterminator monitoring the work and the City's Office of Pest Control.

The baiting exterminator shall be responsible for collecting and disposing of all trapped and poisoned rodents found in live traps and tamper proof bait stations. The baiting exterminator shall also be responsible for posting and maintaining signs announcing the baiting of each particular location.

The Contractor, under his maintenance of site operations, shall be responsible for the immediate collection and disposal of any visible rodent remains found on streets or sidewalk within the project limits. Any visible remains shall be placed into double plastic bags. No more than five (5) carcasses shall be placed into each bag. Each bag shall be a minimum of 3 mils thick, black plastic. No additional payment will be made for this work.

It is anticipated that public complaints will be addressed to the Engineer's Field Office. The Contractor, where directed by the Engineer, shall take appropriate Integrated Pest Management (IPM) actions, like baiting, trapping, proofing, etc., to remedy the source of complaint within the next six (6) hours of normal working time which is defined herein for the purposes of this section as 7 A.M. to 6 P.M. on Mondays through Saturdays.

(D) WATERBUG (AMERICAN COCKROACH) CONTROL

Infested sites (like sewers) shall be baited at least 2 times per month with insecticides.

7.88.5. EDUCATION & TRAINING. The Contractor shall post notices in all Construction Bulletin Boards advising workers, employees, and residents to call the Engineer's Field Office to report rodent

and waterbug infestations. The Contractor shall provide and distribute literature pertaining to IPM techniques of rodent control to affected businesses and superintendents of nearby residential buildings to ensure their participation in maintaining their establishments free of unsanitary conditions, harborage removal and rodent proofing.

Prior to application of any chemicals, the Contractor shall furnish copies or sample labels for each pesticide, antidote information, and Material Data Safety Sheets (MSDS) for each chemical used.

7.88.6. RECORDS AND REPORTS. The survey and monitoring exterminator shall keep a record of all rodent and waterbug infestation surveys conducted by him/her. The findings of each survey shall include, but not be limited to, recommended Integrated Pest Management (IPM) techniques, like baiting, trapping, proofing, etc., proposed for rodent and waterbug pest control. The Contractor shall be required to submit a copy of each survey record to the Engineer, prior to payment.

The baiting exterminator shall maintain records of all locations baited along with the type and quantity of rodenticide and insecticide bait used. These records will be kept by the City Inspector. A weekly report shall be prepared, signed and certified by the approved licensed exterminator.

7.88.7. NONCONFORMANCE. If the Contractor fails to perform as directed to control the rodent and/or waterbug population at any location within the project limits for a period of more than one week, the Engineer will correct the adverse conditions by any means he deems appropriate, including but not limited to, the use of “outside services” and shall deduct the cost of the corrective work from any monies due to the Contractor. The deducted cost of this work shall be in addition to the non-payment for rodent and waterbug pest control.

7.88.8. MEASUREMENT.

(A) RODENT INFESTATION SURVEY AND MONITORING

The quantity to be measured for payment under Item No. 7.88 AA, RODENT INFESTATION SURVEY AND MONITORING, shall be a Lump Sum measurement.

(B) RODENT BAIT STATIONS

The quantity to be measured for payment under Item No. 7.88 AB, RODENT BAIT STATIONS, shall be the number of rodent bait stations and/or live traps satisfactorily installed or reinstalled after inspection within the construction corridor, as approved by the Engineer. However, the initial baiting, and subsequent rebaiting as may be required, of any bait station will be paid for under Item 7.88 AC.

(C) BAITING OF RODENT BAIT STATIONS

The quantity to be measured for payment under Item No. 7.88 AC, BAITING OF RODENT BAIT STATIONS, shall be the number of rodent bait stations satisfactorily baited or rebaited, to replenish consumed or decomposed bait, within the construction corridor, as approved by the Engineer.

(D) WATERBUG BAIT APPLICATION

The quantity to be measured for payment under Item No. 7.88 AD, WATERBUG BAIT APPLICATIONS, shall be the number of blocks satisfactorily treated with insecticide bait within the construction corridor, as approved by the Engineer. A block shall be defined as the area of street, measured between property lines, from intersection to intersection. Each rebaiting of any block shall be considered as a new block for measurement purposes.

7.88.9. PRICES TO COVER.

(A) RODENT INFESTATION SURVEY AND MONITORING

Payment will be made at the lump sum price bid for RODENT INFESTATION SURVEY AND MONITORING which shall include the cost of furnishing all the labor, materials, plant, equipment (traps, etc.), insurance, and other incidentals required, including but not limited to providing all required maintenance of traffic equipment, to perform a rodent infestation survey of the project area and then monitor the site each week for rodent activity, all in accordance with the specifications and the directions of the Engineer.

Ten (10%) percent of the lump sum price bid will be paid when the initial survey of the project area has been completed. The remainder will be paid in proportion to the percentage of contract completion.

(B) RODENT BAIT STATIONS

The Contract price bid for RODENT BAIT STATIONS shall be a unit price per each bait station and/ or live trap installed or reinstalled after inspection and shall cover the cost of furnishing all labor, materials, plant, equipment (bait stations, etc.), insurance, and other incidentals, including but not limited to providing all required maintenance of traffic equipment, required to control the rodent population found within the project limits in accordance with the specifications and the directions of the Engineer.

In addition to the payment for Rodent Bait Stations installed or reinstalled under this Item 7.88 AB, the Contractor will also be paid for each baiting or rebaiting, when required, of each bait station, under Item No. 7.88 AC.

(C) BAITING OF RODENT BAIT STATIONS

The Contract price bid for BAITING OF RODENT BAIT STATIONS shall be a unit price per each bait station satisfactorily baited or rebaited, when required, and shall cover the cost of furnishing all labor, materials, plant, equipment (bait), insurance, and other incidentals, in accordance with the specifications and directions of the Engineer. Installation or resetting of the bait station will be paid for under Item 7.88 AB.

(D) WATERBUG BAIT APPLICATION

The Contract price bid for WATERBUG BAIT APPLICATION shall be a unit price per block treated by the exterminator and shall include the cost of furnishing all the labor, materials, plant, equipment (bait, etc.), insurance, and other incidentals, including but not limited to providing all required maintenance of traffic equipment, necessary to control the waterbug population found within the project limits for the duration of the contract in accordance with the specifications and the directions of the Engineer.

Payment will be made under:

Item No.	Item	Pay Unit
7.88 AA	RODENT INFESTATION SURVEY AND MONITORING	LUMP SUM
7.88 AB	RODENT BAIT STATIONS	EACH
7.88 AC	BAITING OF RODENT BAIT STATIONS	EACH
7.88 AD	WATERBUG BAIT APPLICATION	BLOCK

SECTIONS 7.89 THRU 7.95 (VACANT)

SECTION 7.96 - Anti-Graffiti Coating For Wall Surfaces

7.96.1. DESCRIPTION. Under this item, the Contractor shall furnish and apply a Graffiti-Resistant Coating to exterior stone, concrete, wood, or other surfaces in accordance with OSHA guidelines, the manufacturer's recommendations, in accordance with the Contract Drawings, the specifications, and directions of the Engineer.

7.96.2. MATERIALS. The Contractor shall use materials for Graffiti-Resistant Coatings as follows:

(A) For previously painted masonry, concrete (vertical surfaces), bethabara wood (both painted and unpainted), and metal surfaces (both painted and unpainted), the Contractor shall apply Graffiti Solution System (G.S.S.) as manufactured by American Polymer Corporation, Sandy, Utah 84070, telephone 800-676-5963; ARMAGLAZE, 9000 System aliphatic methane as manufactured by Aquarius Coating, Inc., 905-940-0860; or an approved equivalent.

(B) For new and unpainted masonry, concrete and wood surfaces, the Contractor shall apply Professional Water Sealant (P.W.S.) Coatings as manufactured by Professional Products of Kansas, Inc., Wichita, Kansas 67216, telephone 316-522-9300; or an approved equivalent.

7.96.3. METHODS.

(A) QUALITY ASSURANCE

Graffiti-Resistant Coating shall be applied only by an approved installer per installation instructions who shall be trained by the manufacturer of each respective product and shall be certified by the manufacturers as qualified to install materials specified for this project. Only qualified Contractors or Subcontractors and their trades persons, meeting the above requirements shall be deemed approved. Submit a copy of current SSPC Certificate if applicable.

(B) PRODUCT DELIVERY, STORAGE AND HANDLING

1. The Contractor shall deliver materials in sufficient quantity to allow for continuity of work. Protect all materials and equipment during transit, delivery, storage and handling to prevent damage and deterioration.

2. Avoid fire: open flame and sparks. Container contents, even when empty, may ignite explosively when exposed to heat, welding, cutting torch, pilot lights and other flames and ignition sources at locations distant from the material storage and handling point.

3. Avoid inhalation, ingestion, skin contact, and eye contact.

4. Protect shrubs, plants and grass during application. Avoid wind drift which may injure passersby or damage vehicles and adjacent properties.

5. For additional cautions, human health data and protective equipment to be used (including respiratory) refer to Material Safety Data Sheets.

6. Containers shall be kept closed when not in use.

7. Dispose of excess waste materials and empty containers in accordance with all local, state and federal regulations. Empty containers as may be classified as hazardous; they retain product residues such as vapor, liquid or solid. Do not transfer contents into other containers for storage.

(C.1) GRAFFITI SOLUTION SYSTEM (G.S.S.) PRODUCTS

G.S.S. Coatings. Note: This coating shall be applied to surfaces listed under **Subsection 7.96.2.**, Materials, above (i.e. previously painted masonry, concrete, and wood surfaces and metal surfaces both painted and unpainted).

a. G.S.S. Barrier Standard: Sealer product; standard undercoat - not high solids version. This Standard version shall be used with Clear overcoat. Barrier shall be applied over painted porous surfaces (not metal). For steel and aluminum surfaces, in lieu of G.S.S. Barrier, use a water-borne urethane primer such as Bond-Plex as manufactured by Sherwin Williams Company, (718) 426-8813, or approved equivalent.

b. G.S.S. Barrier High Solids: Shall be used with Pigmented top coat. The high solids version is not recommended for use with clear top coating. High solids barrier consists of a one component, acrylic copolymer coating (see Manufacturer's Product Guide for more information).

c. G.S.S. 10 Clear Coating (Low VOC): Anti-graffiti product; overcoat G.S.S. 10 consists of a polymer composition; two (2) component resin and catalyst system. It is a non-sacrificial permanent coating with flat/matte finish. G.S.S. 10 Part A is premeasured to use for Part B.

d. G.S.S. Pigmented Coating: Anti-graffiti product; top coat. Two (2) component polyurethane, non-sacrificial, protective coating. Color shall be selected from either the manufacturer's standard color guide or Sherwin-William Industrial and Marine Coating, System 4000 color chart. Finish shall be flat/matte (not gloss) unless otherwise noted. (Pigmented coating shall be used in lieu of clear coating when previously painted substrate is not uniform in color and requires concealing with an opaque top coat.)

(C.2) PROFESSIONAL WATER SEALANT (P.W.S.) COATINGS

Note: This coating shall be applied to surfaces listed under **Subsection 7.96.2., Materials**, above (i.e. new and unpainted masonry and concrete).

(C.3) ALL OTHER APPROVED EQUIVALENTS

All other approved equivalents shall be applied to surfaces in accordance with the manufacturer's instructions and as approved by the Engineer.

(D) EXECUTION

1. Surface Preparation. The Contractor shall be required to make surfaces, to be coated under this item, thoroughly dry, cleaned and free of dust, surface dirt, oil, grease and other contaminants that might prevent penetration of the coatings. Newly constructed surfaces, repointed surfaces and concrete shall be cured for at least 28 days before application. Glossy, glazed and slick troweled surfaces should be lightly etched or abraded before application of coatings. Surface defects, voids, joints or cracks must be properly sealed or filled, allowing any patching compounds to be completely cured before application. Cleaning may be accomplished by high pressure washing, sand blasting or chemical cleaning. When chemicals are used, they should be removed by high pressure water cleaning before application of the sealant. Use of raw acids shall not be permitted. Allow cleaned surfaces to dry completely. A test must always be

made prior to application using the same cleaning and application procedures as to be used on the project. This test area shall remain available to be inspected by the Engineer.

2. Application Procedures. General product application must not be initiated during inclement weather, or when precipitation appears imminent. Application should be completed at least four (4) hours before precipitation begins.

2.1. For the G.S.S. Type Coating Systems consisting of both undercoat and topcoat, refer to manufacturer's Application Guide along with information specified herein.

a. G.S.S. Barrier Undercoat sealer shall only be applied when temperature is between 50°F and 95°F. The surface to receive Barrier shall be visibly dry and relative humidity shall be such that condensation does not form on the surface during application.

b. Apply two (2) coats of Standard Barrier Undercoat (3 to 4 mils total) over all previously painted masonry and wood surfaces using either brush, roller or spray. Ensure that the coatings are applied evenly and built up sufficiently to create a protective layer over the underlying surface and to eliminate any future "shadowing" or "ghosting" which would appear after the graffiti removal if the surface is not adequately sealed and coated. Barrier shall be applied creating a pinhole-free surface. Allow 1 to 2 hours between coatings. Avoid over-application of Barrier coating to avoid pooling or pudding which can result in permanent whiting. Application of Barrier in direct sunlight can also result in permanent whiting.

c. G.S.S. 10 Overcoats shall be applied over G.S.S. Barrier undercoat. Prior to installation of overcoats, the barrier coats shall be allowed a minimum of 12 hours drying time. Moisture shall not be permitted on undercoating prior to application of G.S.S. 10 coating. G.S.S. 10 shall be activated by mixing parts A and B. These two portions have been premeasured at a precise ratio. The Contractor shall not mix at any other ratio and shall not add thinner or water. Part B shall be poured into Part A container. While mixing together, stir well with a lifting motion to ensure that the two parts are well balanced. If the coating must be thinned for application purposes, thin with MEK only and only after Parts A and B have been mixed together. The coating may be applied by brush, roller or spray. Apply two (2) coats of G.S.S. 10 of 1 to 2 mils thickness each coat. Allow one(1) to two (2) hours before applying the second coat. If using roller, direct the roller upwards from bottom toward top maintaining a wet wedge.

d. Coverage rates will vary depending upon porosity of the surface and method of application. Once activated, the coating has a pot life of approximately 4 to 6 hours under normal conditions (80°F or less). The lid shall not be left off the container unnecessarily.

2.2. For the Professional Water Sealant (P.W.S.) Type Coating System, refer to Manufacturer's Application Guide along with information specified herein.

a. P.W.S. shall be applied only when temperature is between 60°F and 80°F and relative humidity is less than 50%. Under these ideal weather conditions, the coating will dry to the touch in approximately twenty-five (25) minutes. At lower temperatures, drying time will be longer.

b. The coating shall be applied over all new and unpainted masonry, concrete and wood surfaces using a two (2) coat application process, with a drying time of not more than two and one-half (2-1/2) hours between applications.

Curing time will vary depending upon the temperature and humidity conditions. The second coat shall require six (6) to eight (8) hours to develop full graffiti protection.

c. On vertical applications, P.W.S. shall be applied with a low pressure airless sprayer at an angle to allow the sealant to run down the face rather than to penetrate deep into the voids of the substrate. On porous and rough stone surfaces, it shall be necessary to apply a mist coat before flood coating.

d. On horizontal surfaces, such as wooden bench slats, P.W.S. shall be applied by brooming, brushing, rolling or using airless spray equipment. The coating shall not be permitted to puddle or pond. Over-application may cause surface to become slippery when wet. Excess sealant shall be wiped up immediately.

e. For low pressure spray application, the setting shall be about 40 psi to avoid atomization of the material. Spray equipment shall be fitted with stainless steel or brass fittings and gaskets suitable for solvent solution. A fan spray tip of 50° with flow rate of approximately 4/10 of a gallon per minute is recommended. Coatings shall be applied in a saturating spray application from the top down. Apply sufficient material to create a six (6") inch to eight (8") inch rundown below the contact point. Allow the first application to penetrate the masonry surface until dry to the touch. If a second application is required, less material will be needed.

f. For brush application, brushes should be nylon or other synthetic material resistant to solvent solution. When applying Professional Water Sealant with a brush, apply sufficient material to thoroughly saturate the surface. Avoid excessive overlapping. Take care of brush out runs and drips, and to avoid buildup of Professional Water Sealant.

g. Container shall be kept tightly sealed until ready to use. Stir thoroughly before use. Product shall not be diluted or altered in any way. Coverage rates will vary depending upon surface porosity and texture. Once opened, Professional Water Sealant must be used within 24 hours.

2.3. All other approved equivalents: All other approved equivalents shall be applied to surfaces in accordance with the manufacturer's instructions and as approved by the Engineer.

(E) CLEAN UP INSTRUCTIONS

Clean application equipment immediately after each use. For G.S.S. products, avoid having the G.S.S. 10 coating set up on or inside application equipment, by cleaning frequently with any of the following solvents (do not use solvents other than listed): xylene, lacquer thinner, MEK or n-btyl acetate. If coating has begun to set up and cannot be cleaned with the above, G.S.S. Erasol shall be used for cleaning. All drips and over spray shall be cleaned while still wet. For spraying equipment, cleaning with MEK every one (1) to two (2) hours is recommended. Since G.S.S. 10 adheres permanently to surfaces, including human skin, spills shall be cleaned immediately. For P.W.S. products, clean equipment with mineral spirits or paint thinner. For all other approved equivalents the Contractor shall comply with the manufacturer's directions.

(F) CURE TIME REQUIRED PRIOR TO REMOVER USE

For G.S.S. products, full curing time required before graffiti can be removed from newly applied protective coating is seven (7) days at ambient temperatures. Curing period is longer during cooler temperatures. A test patch shall be performed during cooler temperatures to determine whether the G.S.S. 10 top coat has cured sufficiently to remove graffiti with Erasol Remover product. Apply a small amount of Erasol Remover product on a clean spot of the coated surface and let it stand for 24 hours undisturbed. When the coating appears to have softened, it has not fully cured. When the coating remains hard, then Erasol may be used to remove graffiti.

(G) GRAFFITI REMOVAL

The Contractor shall remove any graffiti which may accumulate until final completion as directed by the Engineer.

For graffiti removal procedures, see manufacturer's literature and instructions. Use of chemicals which are not included in manufacturer's list of components for remover system may damage or remove the protective coating, thereby necessitating the reapplication of sealant/coating systems.

Use of remover products which are not part of the complete system (i.e. not manufactured by the same companies as protective coatings) will void the 10 year manufacturer's warranties/guarantees.

7.96.4. SUBMITTALS.

(A) The Contractor shall submit manufacturer's technical data sheets, vapor transmission testing results, and applicable OSHA regulations for storage, handling, and application of both the Graffiti Resistant Coating and the Graffiti Remover products to the Engineer for approval.

(B) The Contractor shall submit manufacturer's product guarantee/warranty for a period of ten (10) years from the date of purchase, stating that the coatings will allow for the removal of all types of paint and other graffiti materials when same manufacturer's removal product has been used subject to listing of manufacturer's limitations which shall be included with the submittal. Should the product fail, the Manufacturer and/or its Certified Applicator shall remove the graffiti and recoat the surface at their own expense. The Graffiti Coating Contractor/Subcontractor shall provide, sealed in plastic, a statement of the warranty with the name, telephone number, and address of the manufacturer of the product to be contacted in the event that the product fails. The Contractor shall forward two (2) copy of the warranty to the Engineer at the time of final acceptance, one copy of which shall be delivered to the Borough President's Office.

(C) The Contractor shall submit written certification from the respective manufacturers of coatings, certifying that installers have been properly trained and are currently approved by the manufacturers to install the specified graffiti resistant coatings. Provide copy of certification to the Engineer prior to start of Contract work.

7.96.5. (NO TEXT)

7.96.6. MEASUREMENT. The quantity of Anti-Graffiti Coating for Wall Surfaces Only to be measured for payment shall be the number of square feet of surface to which an approved graffiti resistant coating has been applied to the satisfaction of the Engineer.

7.96.7. PRICE TO COVER. The price bid shall be a unit price per square foot of Anti-Graffiti Coating for Wall Surfaces Only shall include the cost of all labor, materials, equipment, insurance, and incidentals necessary to complete the work of furnishing and installing a graffiti resistant coatings. This work shall include, but not be limited to, surface preparation, application and proper curing of coating, and maintenance of surfaces coated for the duration of the contract, all in accordance with the Contract Drawings, the specifications, and the directions of the Engineer.

Payment will be made under:

Item No.	Item	Pay Unit
7.96 A	ANTI-GRAFFITI COATING	S.F.

SECTIONS 7.97 THRU 8.01 (VACANT)

SECTION 8.02 – Special Modification of Work for Installation of New Curb and Sidewalks

8.02.1. DESCRIPTION. Under this Section, the Contractor shall be required to modify work methods of installing new curb and sidewalk in order to maintain, protect and accommodate the integrity of N.Y.C. Transit Authority (T.A.) facilities, trees, under-sidewalk building vaults, and existing sidewalk encroachments to remain (such as brick and/or masonary walls and fences) located within a zone of protection immediately beneath or adjacent to the existing sidewalk and curb designated to be replaced under other contract items. The zone of protection shall define an area of curb and sidewalk where: work is within three (3') feet of T.A. facilities or under-sidewalk building vault facilities, and/or work is within one (1') foot of existing sidewalk encroachments to remain in place, and/or work is within the vicinity of existing tree roots. Work in the vicinity of tree roots shall be as directed by the Engineer, in consultation with the Tree Consultant, for a minimum length of five (5') feet on each side of a tree's centerline.

This section is not intended to cover sidewalk replacement of monolithic vault roof/sidewalk slabs, where there is no separation between the vault roof and sidewalk slabs.

8.02.2. MATERIALS. - Not applicable.

8.02.3. METHOD OF OPERATION/CONSTRUCTION: Once clearances have been verified by available records, and/or information obtained from test pits (excavated under other contract items), to the satisfaction of the Engineer in consultation with the Transit Authority/Tree Consultant, the Contractor shall exercise extreme caution to install new curb and sidewalks within zoned areas of protection. Exercising extreme caution shall mean utilizing appropriate methods of operation/construction, special operations and sequencing, and by employing hand labor, using hand held tools only, under the personal direction of the Engineer in consultation with the appropriate Transit Authority or Tree Consultant: for protection and accommodation of existing street trees where work is within the vicinity of existing tree roots, as directed by the Tree Consultant, for a minimum length of five (5') feet on each side of a tree's centerline; within three (3') feet in any direction of T.A. facilities or under-sidewalk building vault; and, within one (1') feet of existing sidewalk encroachments to remain. The work shall incorporate, but not be limited by, the following restrictions:

1) Removal of Existing Curb and Sidewalk. Removal of existing curb and sidewalk material shall be performed by sawcutting of curb and sidewalk, for a depth of not less than 2", to assist the Contractor in breaking up the concrete curb and sidewalk for removal by hand. Curb and sidewalk removal shall be done with hand labor, using hand held tools only, working from adjacent undisturbed sidewalk and/or pavement. Furthermore, it shall be understood to mean that digging and/or excavating directly with power mechanized earth moving equipment will not be permitted.

Power mechanized earth moving equipment may only be used as a depository of material removed from the excavation by hand as described above. All equipment, methods, and maintenance and protection provisions shall require full authorization by the Engineer in consultation with the facility operator(s)/Tree Consultant.

No removal work will be allowed adjacent to existing trees without the Tree Consultant personally witnessing and directing the work. Every reasonable effort shall be taken so as not to cut or damage tree roots, particularly the thick anchor roots, during removal work. Exposed tree roots shall be covered and protected with clean damp topsoil and/or wet burlap, as approved by the Tree Consultant, immediately after exposure to keep the roots from drying out. Topsoil or burlap shall be kept damp with applications of water, as directed by the Engineer and/or the Tree Consultant. Any fill or backfill placed within the immediate vicinity of existing tree root zones shall be hand firmed only. No separate payment will be made for any topsoil or burlap used to cover and protect tree roots.

2) Preparation & Installation of New Curb and Temporary & New Sidewalk. Backfilling, filling, grading of subbase, and installation of new curb and both temporary and new sidewalk, as required under other Contract Items, shall be performed utilizing materials, equipment and methods of construction that will insure the integrity of the N.Y.C. Transit Authority, under-sidewalk building vaults, existing street trees, existing sidewalk encroachments to remain, and at the same time meet all requirements for this work as specified in other sections of this contract.

3) Compaction. The Contractor shall compact all subgrade and new subbase materials in areas designated as being within the specified zones of protection by utilizing native and/or blended fill material, equipment and methods of construction that will ensure integrity of the N.Y.C. Transit Authority, under-sidewalk building vaults, and existing sidewalk encroachments to remain, and at the same time meet all requirements for compaction as specified in Section 4.11.

Around trees, the Contractor shall avoid soil compaction caused by the operation of heavy equipment within the root zone area. Also, the stock-piling of materials and debris in the vicinity of trees, as determined by the Tree Consultant, will not be permitted.

4) Powered Excavating Equipment Limitations. The Contractor shall not employ powered or mechanical excavating equipment within the zone of protection as shown on the Contract Drawings, closer than three (3') feet in any direction from N.Y.C. Transit Authority facilities and/or under-sidewalk building vaults, closer than one (1') foot in any direction from the existing encroachment to remain in place, or within the vicinity of tree roots as directed by the Tree Consultant. Powered or mechanical excavating equipment may only be used as a depository for material removed from the excavation by hand as described above.

The Contractor shall not be permitted to store, stand and/or travel equipment/vehicles on specified unpaved zoned protection areas.

8.02.4. MEASUREMENT.

(A) ITEM NO. 8.02 A. The quantity of "Special Care Excavation and Restoration for Sidewalk Work" to be measured for payment shall be equal to the number of square feet (S.F.) of new sidewalk actually installed under other contract items within the zone of protection area.

(B) ITEM NO. 8.02 B. The quantity of "Special Care Excavation and Restoration for Curb Work" to be measured for payment shall be equal to the number of linear feet (L.F.) of new curb actually installed under other contract items within the zone of protection area.

(C) ITEM NO. 8.02 AB-S. The quantity of "Special Care Excavation and Restoration for Curb and Sidewalk Work" to be measured for payment shall be equal to the number of square feet (S.F.) of new curb and sidewalk actually installed under other contract items within the zone of protection area.

(D) For payment purposes, the horizontal limits for a zone of protection area shall be defined, for the purpose of this section, as: the area designated on the Contract Drawings or an area equal to the length of the designated facility multiplied by it's width plus three feet on either side; an area equal to the length of the existing encroachment to remain multiplied by a width of one (1') foot adjacent thereto; or, the area within the vicinity of existing tree roots as directed by the Tree Consultant for a minimum length of five (5') feet on each side of a tree's centerline. Where overlapping of the zones occur due to multiple facilities and trees, the area will be modified to one zone measured from the outside limits. Where the zone of protection area falls beyond the curb line the outside boundary shall be the curb line.

8.02.5. PRICE TO COVER.

(A) ITEM NO. 8.02 A. The contract price per square foot for "Special Care Excavation and Restoration for Sidewalk Work" shall be the incremental cost difference of all labor, materials, equipment, insurance, and incidentals required for excavation and disposal of pavement, base and all other material to new subgrade within and adjacent to zone of protection areas; sawcutting, grading, preparation of

subgrades, backfilling, and compaction within zone of protection areas; all in accordance with the Contract Drawings, the specifications and the directions of the Engineer in consultation with the facility operator(s)/Tree Consultant. The price bid shall further include the cost of maintaining, protecting, and accommodating the integrity of existing Transit Authority facilities, existing sidewalk encroachments to remain, and existing street trees during the performance of sidewalk reconstruction (under other Contract Items) within zone of protection areas designated on the Contract Drawings or as directed by the Engineer in consultation with the NYC Transit Authority/Tree Consultant.

(B) ITEM NO. 8.02 B. The contract price per linear foot for "Special Care Excavation and Restoration for Curb Work" shall be the incremental cost difference of all labor, materials, equipment, insurance, and incidentals required to install new curbs and temporary restoration material under other Contract items, within and adjacent to zone of protection areas; all in accordance with the Contract Drawings, the specifications and the directions of the Engineer in consultation with the NYC Transit Authority/Tree Consultant. The price bid shall further include the cost of maintaining, protecting, and accommodating the integrity of the existing Transit Authority facilities, existing sidewalk encroachments to remain, and existing street trees during the performance of sidewalk reconstruction (under other Contract Items) within zone of protection areas designated on the Contract Drawings or as directed by the Engineer in consultation with the NYC Transit Authority/Tree Consultant.

(C) ITEM NO. 8.02 AB-S. The contract price per square foot for "Special Care Excavation and Restoration for Curb and Sidewalk Work" shall be the incremental cost difference of all labor, materials, equipment, insurance, and incidentals required to install curb and sidewalk under other contract items within zone of protection areas; all in accordance with the Contract Drawings, the specifications and the directions of the Engineer in consultation with the railroad facility operator/Tree Consultant. The price bid shall further include the cost of maintaining, protecting, and accommodating the integrity of railroad facilities and existing street trees during the performance of sidewalk and curb reconstruction (under other Contract Items) within zone of protection areas designated on the Contract Drawings or as directed by the Engineer in consultation with the railroad facility operator/Tree Consultant.

(D) Payment for all work specified herein shall be made on a one-time basis only; no payment will be made for the same area of sidewalk or length of curb more than one time.

Payment for Tree Consultant will either be made under Item No. 4.21 or will be furnished directly by the City where no Tree Consultant item is provided.

Payment will be made under:

Item No.	Item	Pay Unit
8.02 A	SPECIAL CARE EXCAVATION AND RESTORATION FOR SIDEWALK WORK	S.F.
8.02 B	SPECIAL CARE EXCAVATION AND RESTORATION FOR CURB WORK	L.F.
8.02 AB-S	SPECIAL CARE EXCAVATION AND RESTORATION FOR CURB AND SIDEWALK WORK	S.F.

SECTIONS 8.03 THRU 8.06 (VACANT)

SECTION 8.07 - Temporary Aluminum Pedestrian Bridge

8.07.1. SCOPE. Under this section, the Contractor shall fabricate, construct, maintain, relocate and remove temporary aluminum bridges over sidewalk work areas to provide pedestrian access to the existing buildings and other areas of the properties, as directed by the Engineer.

8.07.2. DESCRIPTION. The bridge shall be fabricated of aluminum construction framing and deck surfacing. Deck surface of ramps shall be textured to create a non-skid or high traction surface. Bridge ramps shall have a clear usable width which is at least equal in dimension to the size of door to which access is being provided, but in no instance less than a usable width of four (4) feet. Each bridge shall be provided with side guide rails composed of wire stays, posts, and rope. No sharp or adverse projections are to be permitted.

8.07.3. METHOD. Bridges shall be capable of supporting pedestrian traffic including intermittent hand carts.

Shop Drawing and design calculations under the seal of a licensed N.Y.S. Professional Engineer, shall be submitted by the Contractor to the Engineer for approval. The shop drawing shall show framing and other details, including, but not limited to, structural calculations verifying the adequacy of the design to support the loading conditions and handling.

Should the Contractor use a commercially manufactured bridge, the Contractor is to submit the manufacturer's specifications and requirements to the Engineer for approval. Bridges are to be installed in accordance with manufacturer's requirements.

Temporary pedestrian bridge shall remain securely in place during sidewalk work as directed by the Engineer. The Contractor shall repair broken or loose members, remedy any deficiency as required or as directed by the Engineer. Bridge shall not be removed without approval of the Engineer.

8.07.4. MEASUREMENT. The quantity to be measured for payment shall be the actual number of (each) Temporary Aluminum Pedestrian Bridge actually furnished and installed.

Payment will be made for Temporary Aluminum Pedestrian Bridge only for the initial installation at a given location. Where a temporary pedestrian bridge is moved to a new location, as required or directed by the Engineer, payment will be made in the same manner as if it were an initial installation. Minor movement, removal and subsequent reinstallation at the same site, or rearrangement of the temporary pedestrian bridge within a work area will not be considered as a movement to a new location and will not entitle the Contractor to additional payment.

No payment will be made for movements of the temporary pedestrian bridge made for the Contractor's convenience.

8.07.5. PRICE TO COVER. The contract price bid per each Temporary Aluminum Pedestrian Bridge shall cover the cost of all labor, materials, plant, equipment, insurance, and incidentals required to complete the work in accordance with the Contract Drawings, specifications, and the directions of the Engineer.

Payment will be made under:

Item No.	Item	Pay Unit
8.07	TEMPORARY ALUMINUM PEDESTRIAN BRIDGE	EACH

SECTION 8.08 - Variable Message Boards

8.08.1. DESCRIPTION. Under this item the Contractor shall furnish, install, maintain and remove Variable Message Board (VMB) warning devices for the duration of the contract in accordance with the specifications, the National Manual on Uniform Traffic Control Devices for Streets and Highways (National MUTCD) plus the New York State Supplement (NYS Supplement), and the directions of the Engineer. Message Boards are intended for use as temporary traffic warning devices during construction and obstruction periods. The number of Message Boards required to be installed and the locations at which they are to be used shall be as directed by the Engineer.

8.08.2. MATERIALS. Variable Message Boards shall be in accordance with the National Manual on Uniform Traffic Control Devices for Streets and Highways (National MUTCD) plus the New York State Supplement (NYS Supplement). They may be either the reflectorized dot matrix type, electric lamp matrix type, or other approved type. The board shall have a minimum of three lines of display with a minimum of eight 18-inch high bright yellow characters per line. The unit shall have a programmable memory with self-contained keyboard control, and shall be capable of displaying up to six messages in a cyclical sequence. The control console shall include a screen for the operator to preview message content, flash rate and message sequence. The control console shall be mounted in a lockable compartment. Each Message Board shall be capable of displaying various texts applicable to road reconstruction work.

Illumination intensity shall be automatically adjustable for various day and nighttime ambient conditions. The message board shall be trailer mounted. The board shall be solar powered and/or may be energized from utility company service, with battery backup for continuous 24 hour use, unattended.

8.08.3. METHODS. Variable Message Boards shall be placed and programmed by the Contractor as directed by the Engineer. Message boards shall be mounted so that the base of the panel is at least seven (7') feet above the pavement surface and properly aligned to provide optimum viewing by approaching motorists. Variable Message Boards may be relocated or reoriented on a daily basis or more frequently as ordered by the Engineer at no additional cost to the City.

The Contractor shall be responsible for maintenance, repair, and continuous operation of each Variable Message Board until progress of work no longer requires their use, as directed by the Engineer.

8.08.4. NONCONFORMANCE. Failure to repair or replace an out-of-order Variable Message Board within twenty-four (24) hours of written notice by the Engineer shall be deemed a failure to maintain the site, thereby making the Contractor subject to the assessment of liquidated damages under the "Nonconformance" Article of the Maintenance of Site item.

8.08.5. MEASUREMENT. The quantity to be measured for payments shall be the number of Variable Message Boards satisfactorily installed where specified.

8.08.6. PRICE TO COVER. The unit price bid for each Variable Message Board shall include the cost of all materials, equipment and labor necessary to furnish, install, maintain and remove, when directed, a variable message board in accordance with the Contract Drawings, the specifications, and the directions of the Engineer.

Payment for each Variable Message Board will be made as follows:

40% payable upon equipment installation and satisfactory completion of installation tests to verify that the unit is operational.

60% payable in monthly installments for the remainder of the Contract duration following the project acceptance of the variable message board. Monthly payments will be dependent upon the Contractor performing all maintenance duties as may be required.

Payment will be made under:

Item No.	Item	Pay Unit
8.08	VARIABLE MESSAGE BOARD	EACH

SECTION 8.09 (VACANT)

SECTION 8.10 - Survey Monuments

8.10.1. DESCRIPTION. Under this section, the Contractor shall furnish and place permanent survey monuments of the Order specified at locations indicated on the Contract Drawings or as directed by the Engineer, and in accordance with these specifications and the details shown on the following Sketch No. 8.10A, titled "DETAILS - NEW SURVEY MONUMENT", for standard monuments to be use in the Boroughs of Brooklyn, Queens and Staten Island; and Sketch Nos. 8.10B and 8.10C, titled "NEW SURVEY MONUMENT" and "STANDARD BOROUGH MONUMENTS", respectively, for monuments to be used in the Borough of Manhattan. For monuments in the Borough of The Bronx, the Contractor shall furnish and place survey monuments in accordance with the requirements of **Section 8.10M**.

8.10.2. MATERIALS. Concrete shall be Class A-40 and shall comply with the requirements of **Section 3.05, Concrete**, except that the requirements for inspection facilities, automated batching controls and recordation do not apply. The batching, mixing and curing methods, and the inspection facilities shall meet the approval of the Department or its representative. Concrete shall have a minimum compressive strength of 4,000 PSI at 28 days.

The monument plate shall be a 3" diameter, bronze or brass, domed top marker similar to U.S. Army Corps of Engineers "Concrete Marker Disk". The plate shall have a top thickness and stem diameter as shown on Sketch No. 8.10A, titled "DETAILS – NEW SURVEY MONUMENT", or Sketch No. 8.10B, titled "NEW SURVEY MONUMENT", as applicable, and shall have a three (3") inch long stem with a one (1") inch long flare.

Each plate shall carry the following inscriptions: "BOROUGH PRESIDENT OF (insert borough name) – TOPOGRAPHICAL BUREAU", the appropriate Borough President's Topographical Bureau plate reference numbers, cross hairs centered on the plate, "PENALTY FOR REMOVAL" or "DO NOT DAMAGE", as shown in the sketches, and "TOPOGRAHICAL BUREAU". The inscription shall be raised or embossed or cast into the plate to a height or depth of not less than 1/16".

8.10.3. CONSTRUCTION METHODS. Prior to construction of the monuments, the Contractor shall submit, for the Engineer's review and approval, shop drawings showing monument locations, construction details, plate marker design or monument cover design as applicable, a description of the proposed survey procedure, and information on equipment to be used.

The Contractor shall neatly sawcut and excavate the pavement and subbase, as required, and construct and install survey monuments at the locations shown on the Contract Drawings or as directed by the Engineer, at such time as the Engineer directs them to be placed. However, in no case shall monuments be installed prior to construction of the corner sidewalk quadrants at monument locations.

Each new survey monument to be installed in Brooklyn, Queens and Staten Island shall be installed by constructing a sheet metal form at least four (4') feet long and of the dimensions and shape shown on

Sketch No. 8.10A. The form shall be filled with concrete and the plate marker or copper bar, as required, embedded at the top, as shown in the monument sketch.

Each new survey monument to be installed in Manhattan shall consist of a precast concrete monument 3'- 8" long tapering from a 10" x 10" square base to a 5" x 5" square top, with an embedded plate marker at the top. Each precast concrete monument shall then be set in place in a two (2') foot square by four (4') feet deep hole, with the bottom of the mounument embedded one foot six inches (1'- 6") deep into a one foot ten inch (1'- 10") deep concrete foundation, such that the monument plate will be set flush with the surrounding sidewalk pavement, as shown in Sketch No. 8.10C.

The remaining excavated area surrounding the monument shall be backfilled with compacted sand, or other approved granular material, up to the base of the adjacent sidewalk pavement and the sidewalk pavement restored with concrete to match the existing pavement as directed by the Engineer.

The monument shall remain undisturbed during the required setting and curing period. Thereafter, the Contractor shall be responsible for the monument's maintenance, keeping them in their proper location and condition at all times, until the final acceptance of the contract work.

8.10.4. MONUMENT REFERENCING. Monuments shall be referenced to the New York State GeoCoordinate System and their location shall be certified by a New York State Licensed Surveyor.

Horizontal coordinates of survey monuments shall be referenced to the New York State GeoCoordinate System as follows:

(A) For Order B Surveys. The horizontal coordinates of the Order B survey monument shall be established using the Global Position System (GPS) and shall be referenced to the New York State GeoCoordinate System using an Order B survey in accordance with the Federal Geodetic Control Committee publication Geometric Geodetic Accuracy Standards and Specifications for using GPS Relative Positioning Techniques, Version 5.0, dated August 1, 1989, except as otherwise noted herein.

(B) For Order C-1 Surveys. The horizontal coordinates of the Order C-1 survey monument shall be established using Ground Survey Methods and shall be referenced to the New York State GeoCoordinate System using an Order C-1 survey in accordance with the Standards and Specifications for Geodetic Control Networks published by the Federal Geodetic Control Committee.

Elevations of monuments shall be provided. Elevations shall be referenced to an existing benchmark or monument to be furnished by the Borough President's Topographical Bureau at the time of transmittal of the monument locations. Such benchmark or monument shall be no further than seven (7) City blocks or 2,500 feet (whichever is less) from the limits of this contract. If no such existing benchmark is available, the Surveyor shall furnish elevations of new monuments relative to each other.

The precision of horizontal and vertical control for the establishment and for the referencing of the new monuments shall be in accordance with the standards and limits for Order B or Order C-1 surveys as shown in the Federal Geodetic Control Committee standards cited above. The Contractor shall furnish the information on the new monument locations and their coordinates to the Borough President's Topographical Bureau and to the Survey Coordination Group of the New York State Department of Transportation.

Full documentation shall be provided by the Surveyor in the form of a report under the Seal of the Surveyor. The report shall include, but not be limited to, the following: a detailed site plan, coordinates, computations (including all field notes), computer tapes and computer print outs.

8.10.5. SUBMITTALS. The Contractor shall submit the following for review and approval by the Engineer and additional sets for the records of the Borough President's Topographical Bureau, the

Survey Coordination Group of the New York State Department of Transportation, and the Technical Support Office of the Department of Design and Construction:

(A) Shop drawings of monument locations, construction materials and procedures, and plate design.

(B) Information on the equipment and labor to be used in installing and surveying the new monuments.

(C) A description of the proposed survey procedures.

(D) A complete set of survey notes, plans, computer tapes, computer print outs and computations.

(E) A notarized certification by a New York State licensed Surveyor that the survey results comply with the specified accuracy of an Order B survey or an Order C1 survey, as applicable.

8.10.6. MEASUREMENT. The number of permanent survey monuments, of each type and Order, to be paid for under this section shall be the number of fully documented permanent survey monuments furnished and installed in accordance with these specifications and to the satisfaction of the Engineer.

8.10.7. PRICES TO COVER. The unit price bid per each New Survey Monument, of each type and Order, shall cover the cost of all labor, materials, equipment, insurance, and accessories necessary to furnish and install approved survey monuments complete with excavation, backfill, sidewalk pavement restoration, monument plates or copper bars and covers, as specified, and a fully documented survey, plan and report, all in accordance with the Contract Drawings, the specifications, and the directions of the Engineer.

Payment will be made under:

Item No.	Item	Pay Unit
8.10 B	NEW SURVEY MONUMENTS, TYPE B	EACH
8.10 C-1	NEW SURVEY MONUMENTS, TYPE C CLASS 1	EACH

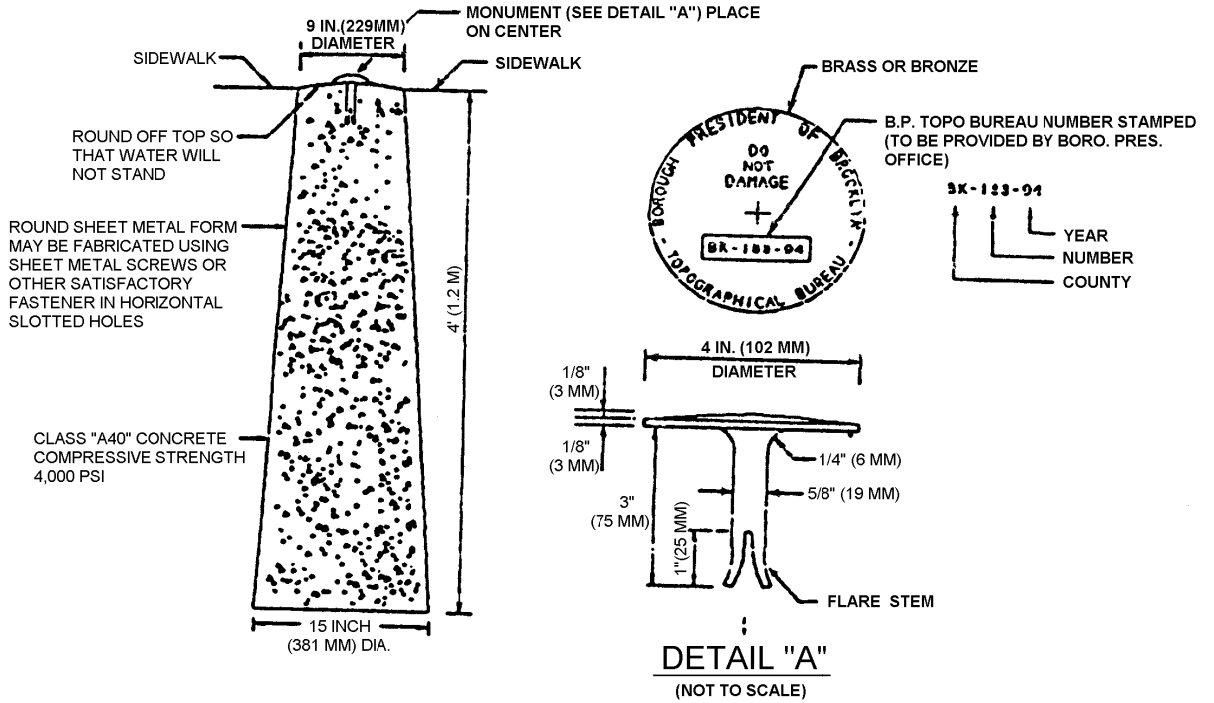

DETAILS - NEW SURVEY MONUMENT

(NOT TO SCALE)

SKETCH No. 8.10A

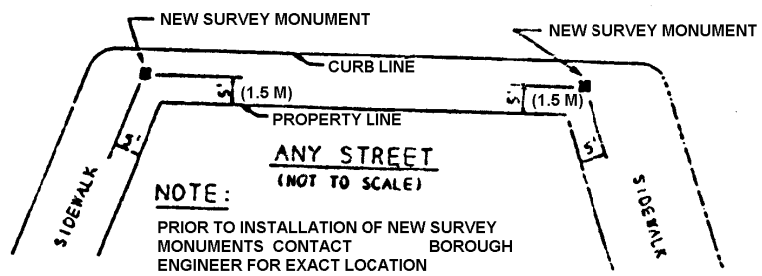

NOTE:

PRIOR TO INSTALLATION OF NEW SURVEY MONUMENTS CONTACT BOROUGH ENGINEER FOR EXACT LOCATION

TYPICAL LOCATION SKETCH

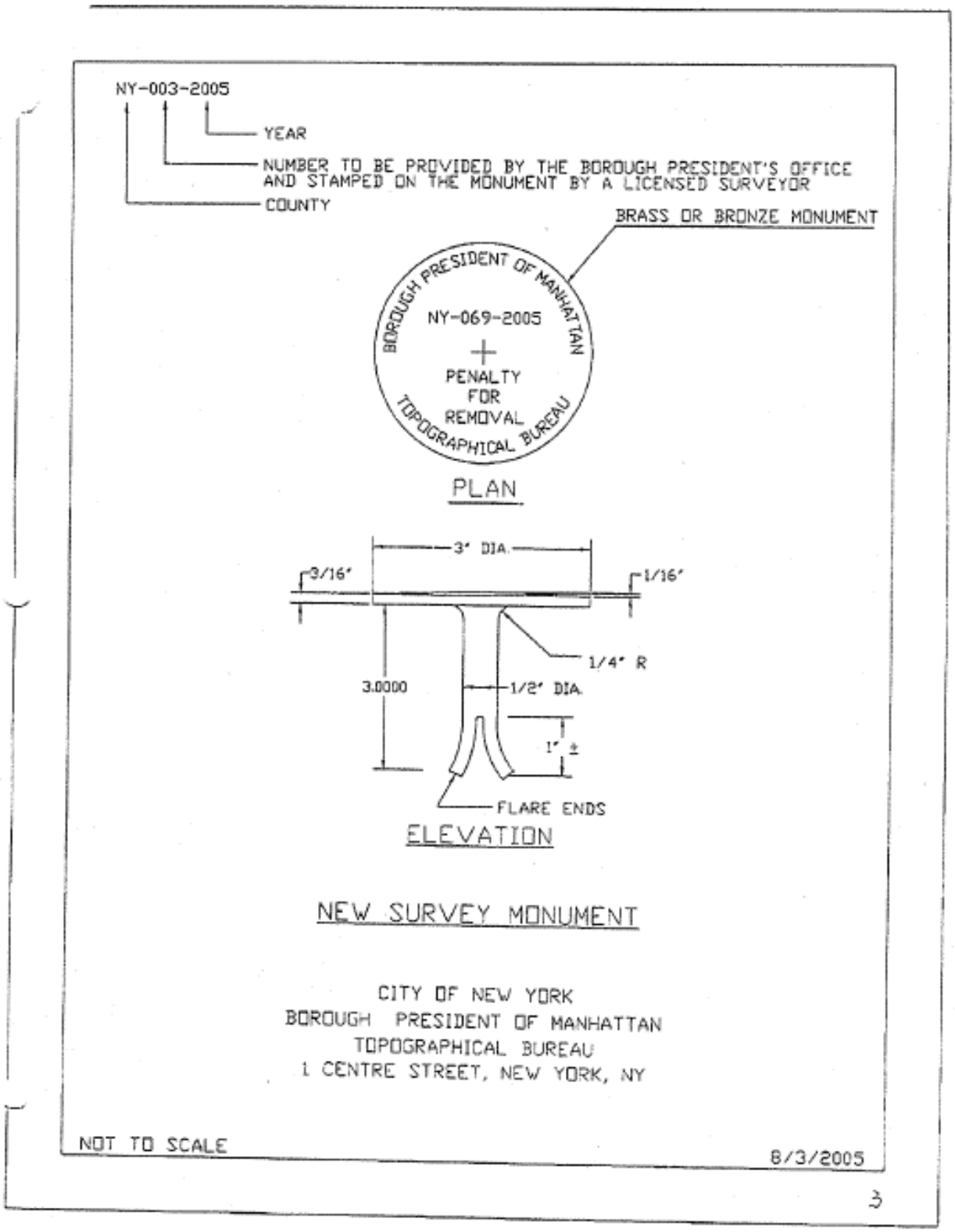

Sketch No. 8.10B

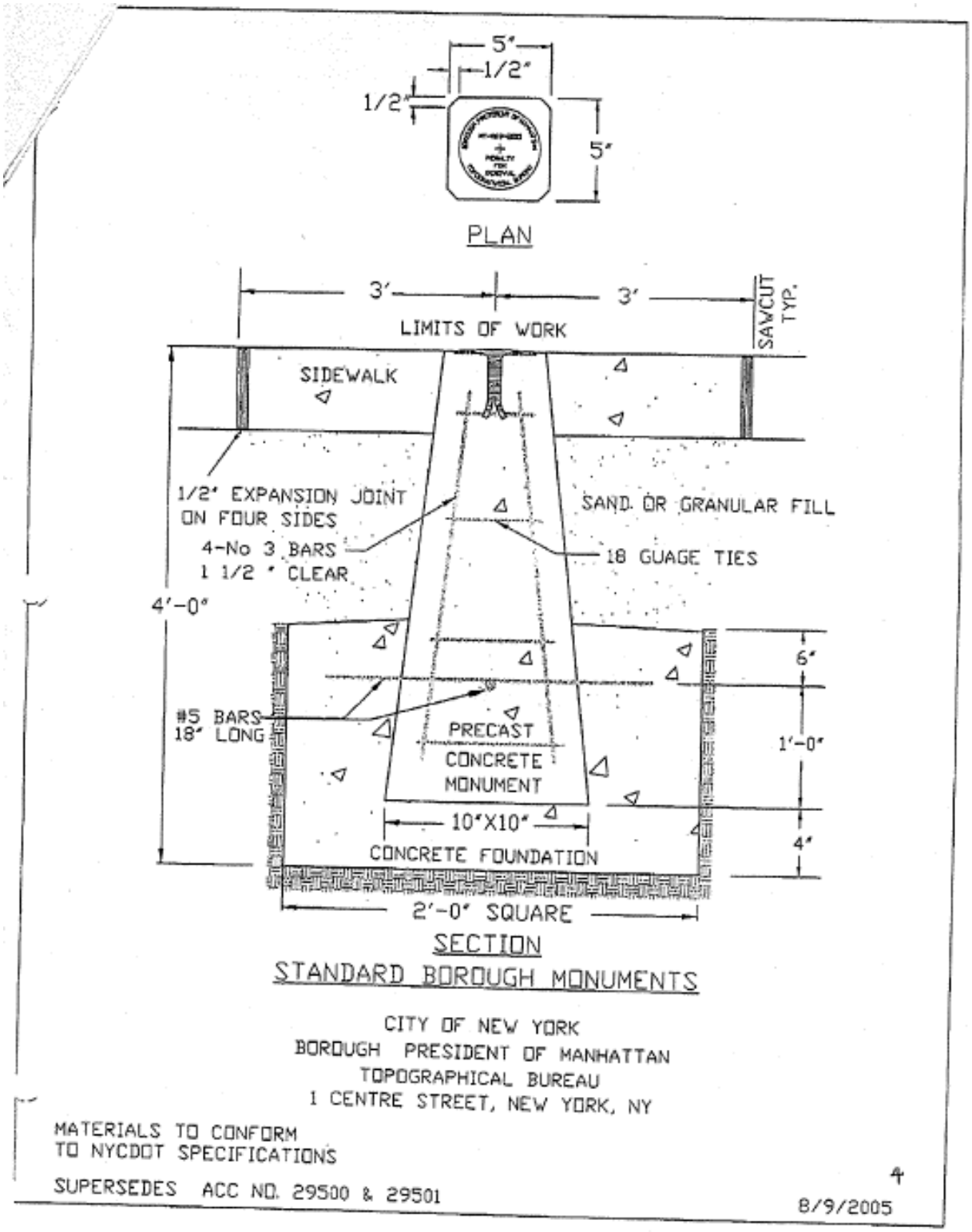

Sketch No.8.10C

SECTION 8.10M - Survey Monuments

8.10M.1. DESCRIPTION. Under this section, the Contractor shall furnish and place permanent survey monuments of the Order specified at locations indicated on the Contract Drawings or as directed by the Engineer, and in accordance with these specifications and the details shown on the following Sketch Nos. 8.10MA, 8.10MB, and 8.10MC, titled "STANDARD CONCRETE MONUMENT", "SETTING OF STANDARD CONCRETE MOUNMENTS FOR BOROUGH SURVEY", and "STANDARD-MONUMENT-COVER", respectively, for monuments to be used in the Borough of The Bronx.

8.10M.2. MATERIALS. Concrete shall be Class A-40 and shall comply with the requirements of **Section 3.05, Concrete**, except that the requirements for inspection facilities, automated batching controls and recordation do not apply. The batching, mixing and curing methods, and the inspection facilities shall meet the approval of the Department or its representative. Concrete shall have a minimum compressive strength of 4,000 PSI at 28 days.

All other materials required shall be as shown on the attached sketches and be as approved by the Engineer.

8.10M.3. CONSTRUCTION METHODS. Prior to construction of the monuments, the Contractor shall submit, for the Engineer's review and approval, shop drawings showing monument locations, construction details, monument cover design, a description of the proposed survey procedure, and information on equipment to be used.

The Contractor shall construct and install survey monuments at the locations shown on the Contract Drawings or as directed by the Engineer, at such time as the Engineer directs them to be placed. However, in no case shall monuments be installed prior to construction of the corner sidewalk quadrants at monument locations.

Each new survey monument shall be installed by constructing a sheet metal form at least 4-1/3 feet long and of the dimensions and shape shown on the following Sketches. The form shall be filled with concrete and the plate marker embedded at the top, as shown in the following Sketch No. 8.10MA - Standard Concrete Monument.

The monument shall remain undisturbed during the required curing period. Thereafter, the Contractor shall be responsible for the monument's maintenance, keeping them in their proper location and condition at all times, until the final acceptance of the contract work.

8.10M.4. MONUMENT REFERENCING. Monument referencing shall be provided as specified under **Subsection 8.10.4**.

8.10M.5. SUBMITTALS. Submittals shall be provided as specified under **Subsection 8.10.5.**

8.10M.7. BASIS OF PAYMENT. The unit price bid per each New Survey Monument, in each Order, shall cover the cost of all labor, materials, equipment, insurance, and accessories necessary to furnish and install approved survey monuments complete with monument plates and a fully documented survey, plan and report, all in accordance with the Contract Drawings, the specifications, and the directions of the Engineer.

Payment will be made under:

Item No.	Item	Pay Unit
8.10 BM	NEW SURVEY MONUMENTS, TYPE B (WITH MONUMENT COVER)	EACH
8.10 C-1M	NEW SURVEY MONUMENTS, TYPE C CLASS 1 (WITH MONUMENT COVER)	EACH

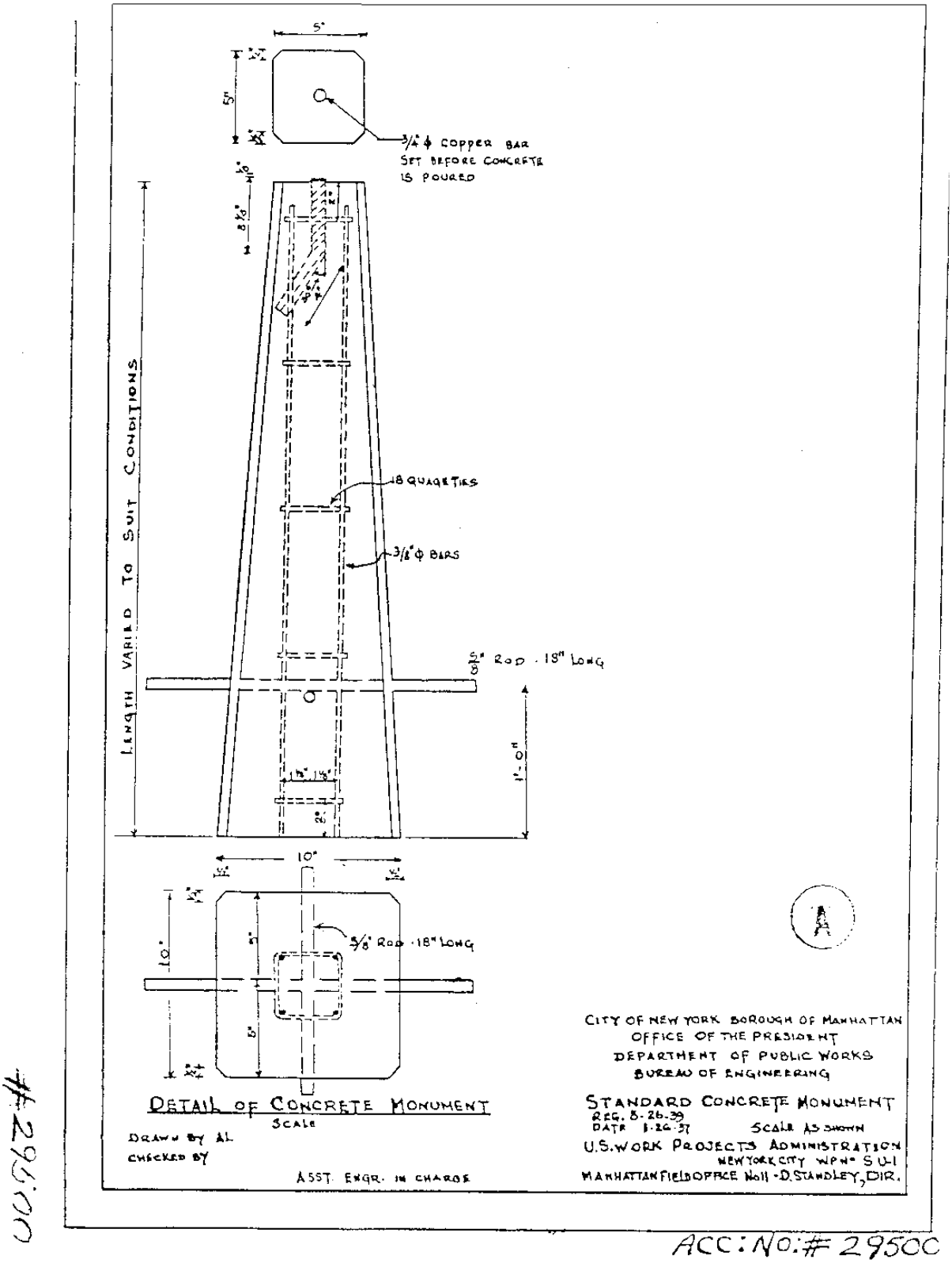

EXHIBIT 10-A - DRAWING SHOWING CONSTRUCTION DETAILS OF CONCRETE TRAVERSE MONUMENTS

Sketch No. 8.10MA

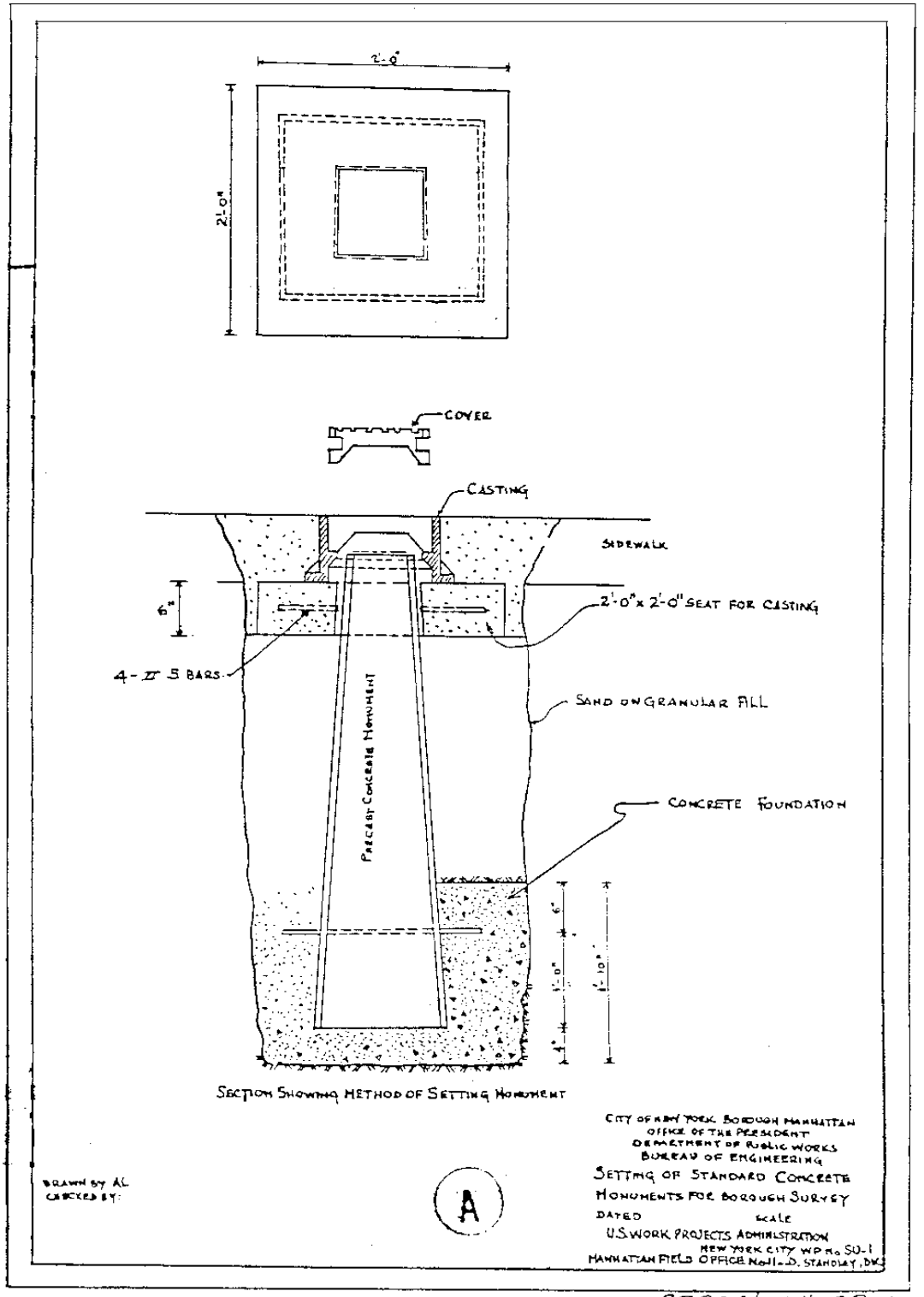

ACC: NO: #29501

#29501

EXHIBIT - 10-8 - DRAWING SHOWING CONSTRUCTION DETAIL OF CONCRETE COLLARS AND METHOD OF SETTING MONUMENTS

Sketch No. 8.10MB

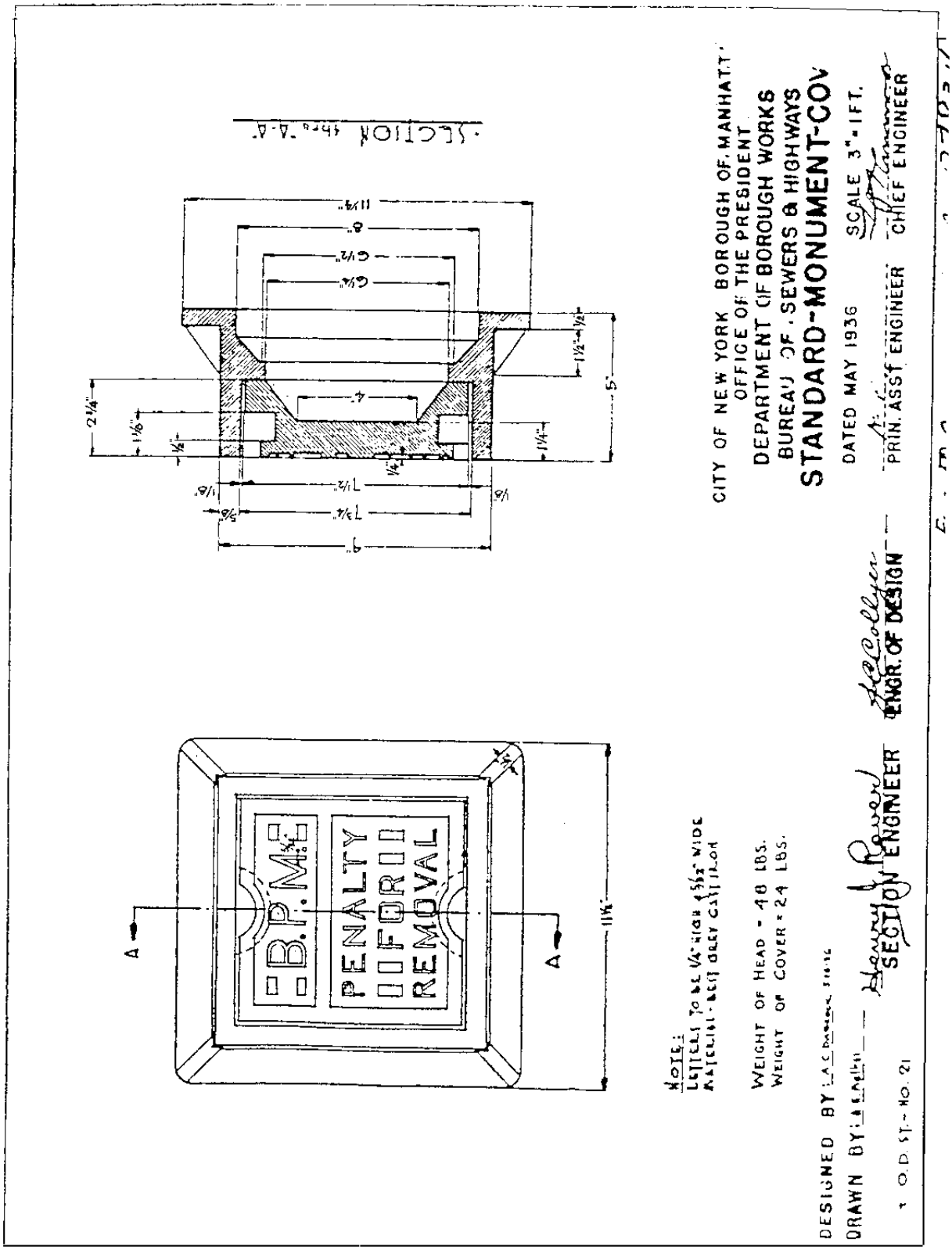

Sketch No. 8.10MC

SECTION 8.11 (VACANT)

SECTION 8.12 - Temporary Retaining Wall

8.12.1. INTENT. This section describes the work required for construction of Temporary Retaining Walls.

8.12.2. DESCRIPTION. Under this section, the work shall consist of furnishing and installing new precast concrete block retaining walls in accordance with the Contract Drawings, the specifications, and the direction of the Engineer.

8.12.3. MATERIALS.

(A) WALL BLOCKS

Concrete blocks shall be similar to KEYSTONE retaining wall units as manufactured by Anchor Products, Inc., or an approved equivalent. Concrete modular blocks shall be manufactured in accordance with the requirements of ASTM designation C 90. Only aggregates complying with ASTM C 33 shall be used in the retaining wall units. Concrete modular units shall be free of cracks, depressions, and spalled, patched, or plastered surfaces or edges, or any other defect that may impair their strength, durability, and appearance. The minimum unit weight of the in-place filled blocks is to be 130 pounds per cubic foot, including fill.

(B) WALL CAP

Wall cap is to be the same composition as the wall blocks.

(C) COLOR

The entire wall system is to be a gray color as approved by the Engineer.

(D) CONNECTING PINS AND ATTACHMENTS

Connecting pins and attachments required for erection of the wall are to be compatible with the wall block and tie back system, and shall comply with the block manufacturer's recommendations. Pins shall be thermoset isopthalic polyester resin-pultruded fiberglass reinforcement rods or an approved equivalent and shall have a minimum flexural strength of 128,000 psi and short beam shear of 6,400 psi.

(E) TIE BACK SYSTEM

The geogrid tie back system shall be as shown on the Contract Drawings. It shall be a two directional grid composed of 100% polyester multifilament yarns, interlocked into a stable network such that the yarns retain their relative positions. The grid is to have ultraviolet-resistant finish and be inert to biological degradation. Also, it must be resistant to naturally encountered chemicals, alkalies, and acids.

Tie back grids are to be continuous from the wall block to its back end without splices. The geogrid shall have all properties at least equivalent to those of the MIRAGRID 5T by MIRAFI INC. The geogrid is to conform to the following:

Grid Property	Unit	Test Method	Minimum Average Roll Value	
			Warp	Fill`
Long Term Allowable Design Load (LTADL)	lb/ft	Calculated Per TF-27	1000	600
Maximum Allowable Total Strain at LTADL after 2000 hours	(%)	Tension Creep	5	5
Tensile Strength	lb/ft	*ASTM D 4632	2900	1700
Elongation	(%)	*ASTM D 4632	20	25
Wide Width Tensile Strength	lb/ft	**ASTM D 4595	2600	1500
Wide Width Elongation	(%)	**ASTM D 4595	15	20
Retained Modulus	(lb/ft)	Calculated	20,000	12,000
Open Area	%	COE Method	65	
Ph Resistant Range			2	12
Grid Aperture Size	inch	Measured	1.2	1.3
Thickness	Mils	ASTM D 1777		80
Weight	Oz/yd	ASTM D 3776		8

*Modified for geogrid using sample size; 1 strand by 4 junctions with two junctions between jaws.
**Modified for geogrids using an approximate 8-inch wide x 4-inch gauge length sample.
TF-27 is Task Force 27, advisory committee to FHWA.

The Contractor shall submit certified test data for each shipment of material.

(F) GRANULAR DRAINAGE MATERIAL

Used for Unit Fill and Drainage Material wrapped in Plastic Filter Fabric behind the wall. Material shall be gravel with a maximum size of 3/4” with the following gradation:

Sieve Size	Percent Passing by Weight
3/4”	100
3/8”	70 - 90
No. 4	60 - 80
No. 16	30 - 60
No. 40	10 - 35
No. 200	0 - 3

(G) SELECT GRANULAR MATERIAL

Used for wall bedding. Material shall be a natural sand or stone, 1/2” maximum aggregate with the following gradation:

Sieve Size	Percent Passing by Weight
1/2”	100
1/4”	30 - 100
No. 4	0 - 50
No. 200	0 - 10

(H) PLASTIC FILTER FABRIC

The purpose of the plastic filter fabric is to provide a permeable layer which allows water but not soil particles to pass through.

The plastic filter fabric shall be composed of a strong polymer type fiber, resistant to both rot and insects, and formed into a non-woven fabric with the following minimum requirements:

Grab Tensile Strength, ASTM D 4632	180 lbs.
Trapezoid Tear Strength, ASTM D 4533	50 lbs.
Puncture Strength (5/16"), ASTM D 3787 modified (with 5/16" diameter flat tip with 1/32" x 45° Chamfer)	75 lbs.

The fabric shall be free of any treatment which might significantly alter its physical properties. During all periods of shipment and storage, the fabric shall be wrapped in a heavy-duty protective covering to protect it form direct sunlight, mud, dirt, dust and other debris.

The Contractor shall submit certified test data to cover each shipment of material.

(I) TILE DRAIN

To be concrete, or plastic with perforations as shown on the Contract Drawings.

8.12.4. PRE-CONSTRUCTION.

(A) SAMPLES

Contractor is to submit samples of all materials in the proposed color to be used on the project including wall blocks, wall cap, connections, and tie back system.

(B) COLOR

The color of the wall and the cap is to be submitted to the Engineer for approval.

(C) SHOP DRAWINGS

Prior to manufacturing precast modular blocks, the Contractor shall furnish five (5) copies of shop drawings and supporting calculations to the Engineer for approval. Retaining walls shall be designed for a superimposed load of 600 psf and an overturning load caused by pedestrians leaning over a chain link fence anchored at the top of the retaining wall. Shop drawings shall show typical blocks layouts for fabrication and erection purposes. Shop Drawings showing the entire wall system with tie backs and footing pads, and anchor details for fence post shall be prepared and certified by the contractor's Professional Engineer, registered in the State of New York and shall be submitted to the Engineer for approval. Representative cross sections of the wall system are to show that the back-slope of the walls does not exceed 1 on 2. The pattern of stepping of the top of the wall is to be shown on the drawings.

The shop drawings shall also reflect all information needed to fabricate and erect the walls including, but not limited to, the proposed footing elevations; the shape and dimensions of blocks; the size and details of the joint fillers; the size of the concrete (Class B-32) leveling pad; and any additional details necessary.

Also, shop drawings shall clearly show the layout and connection details of geogrid tie back system. Shop drawings shall show installation of Cap Units in compliance with the manufacturer's recommendations including, but not limited to, the joint details at the sidewalks.

(D) MANUFACTURERS REQUIREMENTS AND RECOMMENDATIONS

All documents which pertain to erection of the wall which are provided by manufacturers of the individual components are to be submitted to the Engineer.

Only after all the above mentioned items have been submitted and approved, as well as the Contractor meeting all other requirements of the contract will the Contractor be permitted to begin work.

8.12.5. METHODS.

(A) GENERAL

Contractor is to perform required operations including sawcutting of pavements, removal of existing walls, and other excavation (Item 6.02 AAD or 6.02 AAN, as applicable), preparation of foundation, constructing new walls, placing tie backs, backfilling with Select Granular Fill (Item 4.11 CC or 4.11 CD, as applicable), grading and Sodding (Item 4.19).

(B) FOUNDATION

Excavation of any existing walls and for the foundation of the new replacement wall shall comply with the requirements of Section 6.02. Special care shall be taken so that the foundation bearing material key at the base of the wall is not disturbed during the site preparation. All material resulting from excavation shall be removed from the site immediately.

Bed course material of Select Granular Material shall be placed and compacted to form a bed course of the required thickness.

Both the prepared foundation and bedding for the new retaining wall shall be firm and normal to the face of the proposed wall and shall have been approved by the Engineer before any of the wall is placed. In areas where foundation materials are not acceptable to the Engineer, that material shall be excavated to the depth and width as directed by the Engineer, and backfilled with Select Granular Material, and compacted to a density of at least 95% of the Standard Proctor Maximum Density.

(C) ERECTION

The wall members shall be erected as shown on the Contract Drawings and in accordance with approved shop drawings.

Wall members shall be carefully handled and erected in a manner to avoid any damage. Any members which become creaked or otherwise damaged during erection shall be completely removed and replaced at the Contractor's expense.

All necessary connections, clips or incidental hardware is to be furnished and installed by the Contractor.

(D) BACKFILLING WALLS

The cells formed by the wall members shall be backfilled with granular drainage material. Granular drainage material shall also be placed in back of each retaining wall, wrapped in plastic filter fabric as shown on the Contract Drawings.

Filling of the interior of the walls or cells may progress simultaneously with the erection of the walls or cells. The granular drainage material shall be placed in approximately six (6") inch layers and tampered or compacted. Each layer shall be compacted to a density of at least 95% of the Standard Proctor Maximum Density.

Backfilling of the area behind the wall (Item 4.11 CC or 4.11 CD, as applicable) is to progress simultaneously with the erection of the wall and placement of the tie back system and placing granular

drainage material and plastic filter fabric. Tie back system is to be pulled taut and staked. Backfilling is to progress with the geogrid taut. Materials excavated from this project site will not be permitted as backfill for walls.

Contractor is to schedule his operations so that construction of the wall and backfilling is performed as rapidly as practical after excavation.

Wall cap is to be securely attached to the top of the wall using a high strength adhesive compound in compliance with the manufacturer's recommendations.

Grading, Sodding (Item 4.19) to be performed in accordance with Contract Drawings and specifications.

8.12.6. MEASUREMENT. The quantity to be measured for payment shall be the number of square feet of exposed outside facial area of masonry block Temporary Retaining Wall, actually incorporated into the work, complete in place and accepted. End returns and side returns are to be included in areas to be measured. Measurement will be made on the plane of the face and will be made to the outermost elements of the structure. Wall cap is not to be measured for payment.

8.12.7. PRICE TO COVER. The contract price bid per square foot of Temporary Retaining Wall shall cover the cost of furnishing all labor, materials, plant, equipment, insurance, and all other incidentals required to complete the work, in accordance with the Contract Drawings, the specifications and the directions of the Engineer.

Payment will be made under:

Item No.	Item	Pay Unit
8.12	TEMPORARY RETAINING WALL	S.F.

SECTIONS 8.13 THRU 8.21 (VACANT)

SECTION 8.22 - Three Ply Membrane Waterproofing

8.22.1. WORK TO INCLUDE. Under this section, the Contractor shall furnish and apply three ply membrane waterproofing, in accordance with the Contract Drawings, the specifications, and the directions of the Engineer. Three ply membrane waterproofing, except as otherwise specified herein, shall consist of a membrane of minimum three layers of treated fiberglass fabric mopped with asphalt, applied to the structure as indicated on the Contract Drawings. Where required, free drainage shall be provided by pipe drains, hollow tile, or broken stone.

8.22.2 MATERIALS.

A. General.

1. Materials shall be delivered to the Site in the manufacturer's sealed containers, marked with the manufacturer's name and brand indicating the grade and quality of the materials.
2. Materials showing evidence of damage, deterioration, or having been opened will be rejected.

3. Rejected materials shall be removed from the Site before the application of Membrane Waterproofing is started.

4. Materials shall be stored so that they will not be subject to physical damage or contamination. These materials shall be protected from oils, greases, waxes and solvents.

B. Material Properties.

1. Fabric Requirement.

a. The fabric to be used shall be a fiberglass asphalt treated fabric conforming to ASTM D 1668, Type I which shall have been treated before being brought to the Site. The untreated fabric shall weigh not less than 1.4 ounces per square yard, which when treated shall weigh not less than 2.0 ounces per square yard. The thread count shall be between 20 and 24 per linear inch in each direction. The strength of the fabric shall not be less than 75 pounds in either direction by the Strip Method (ASTM D 5035).

b. The material used in treating the fabric shall have the same general characteristics as that used in cementing the layers on the work. The melting point of the asphalt used for treating fabric shall be between 135 degrees and 170 degrees Fahrenheit.

2. Asphalt Primer Requirements.

a. The waterproofing system shall be used with a cold applied primer conforming to ASTM D 41.

3. Asphalt Requirements.

a. Asphalt for waterproofing shall consist of fluxed natural asphalt, or asphalt prepared by the careful steam distillation of asphaltic petroleum, or by the careful steam distillation and air-blowing of asphaltic petroleum conforming to ASTM D 449. The samples of asphalt, the materials used in its preparation, and the documents related to the method of manufacture shall be maintained for the inspection of the Engineer. The asphalt shall comply with the following requirements:

1. The melting point of fluxed natural asphalt shall be between 115 degrees and 140 degrees Fahrenheit, as determined by the Ring and Ball method. The melting point of steam distilled asphalt shall be between 125 degrees and 140 degrees Fahrenheit as determined by the Ring and Ball method. The melting point of steam-distilled and airblown asphalt shall be between 125 and 140 degrees Fahrenheit as determined by the Ring and Ball method.

2. The consistency of the asphalt shall be determined by the penetration, which shall be between 50 and 100 at 77 degrees Fahrenheit, and not less than 5 at 32 degrees Fahrenheit. Penetration shall be the depth of 0.0039 inch of a No. 2 cambric needle. At 77 degrees Fahrenheit, the needle shall be weighted to 3.527 oz. and shall act for 5 seconds. At 32 degrees Fahrenheit the needle shall be weighted to 7.054 oz. and shall act for one minute.

3. A briquette of the asphalt of cross-section of 0.155 square inch shall have ductility of not less than 11.81 inch at 77 degrees Fahrenheit, the

material being elongated at the rate of 1.97 inch per minute. (Dow moulds).

4. The specific gravity of the asphalt shall be not less than 1.00 at 77 degrees Fahrenheit.

5. Fluxed natural asphalt shall be not less than ninety-five (95) percent soluble in cold carbon disulphide. Steam-distilled asphalt shall be not less than 99 percent soluble in cold carbon disulphide. Steam-distilled and airblown asphalt shall be not less than 99 percent soluble in cold carbon disulphide.

6. When a fifty gram sample of the asphalt is heated for 5 hours at a temperature of 325 degrees Fahrenheit in a tin box approximately 2-3/16 inches in diameter it shall not lose over one percent by weight.

7. The penetration of the residue of the asphalt at 77 degrees Fahrenheit after heating as specified in the preceding paragraph shall be not less than 60 percent of the original penetration.

8. Temperature of asphalt at time of application shall be in accordance with the manufacturer's recommendations.

4. Waterproofing Protection Board.

a. Waterproofing protection shall be 1/4-inch thick asphalt-impregnated glass fiber rigid board conforming to ASTM D 6506 “Asphalt Based Protection Board for Below Grade Waterproofing”.

5. Asphalt Mastic Waterproofing.

a. Where indicated on the Contract Drawings, asphalt mastic of the quality specified in **Subsection 8.22.2.B.3., “Asphalt Requirements”**, shall be used.

8.22.3. METHODS.

A. Preparation of Surface.

1. Existing concrete surfaces to which membrane waterproofing is to be applied shall be thoroughly cleaned, all projections removed and all voids made smooth by applying a mortar bed to the existing concrete. Bevels or fillets shall be provided where surfaces intersect. The asphalt primer shall be applied to a dry substrate and in no case shall it be applied until at least 7 days after concrete placement, or longer if so recommended by the manufacturer.

2. All surfaces to which waterproofing is to be applied shall, if practicable, be made dry before applying the waterproofing. If it is impractical to make such surfaces dry then there shall be first laid a dry ply consisting of a layer of asphalt-treated felt of approved quality on the upper surface of which shall be spread the first layer of asphalt. The dry ply shall be held in place with thumbtacks. The membrane shall be applied when the weather is dry and the temperature in the shade is above 40 degrees F (5 degrees C).

3. The substrate shall be free of dust, oil, grease and loose, weak and unsound materials. In order to insure a suitable surface, one of the following blast cleaning methods shall be used:

a. dry sandblasting

b. wet sandblasting

c. high-pressure water jetting

B. Application

1. Heating.

a. The kettles in which the asphalt is heated on the Site shall be equipped with thermometers.

b. The asphalt shall be heated to a temperature of approximately 250 degrees Fahrenheit, but in no case shall asphalt be heated to a temperature of more than 350 degrees Fahrenheit. Asphalt heated above 350 degrees Fahrenheit shall not be used in the Work. Asphalt overheated by more than 50 degrees Fahrenheit for more than 1 hour shall be removed from the Site.

c. The fuel for heating the asphalt shall be as nearly as practicable non-smoke-producing. Depending upon local conditions, portable or non-portable heating containers may be used.

C. Membrane Waterproofing; How Laid.

1. The membrane waterproofing shall not be laid unless concrete is cured for seven days. On smooth surfaces there shall be spread hot melted asphalt in a uniformly thick layer; on this layer of asphalt shall be laid a treated fiberglass fabric; this process shall be repeated until such number of layers as indicated on the Contract Drawings have been placed and a final coat of asphalt shall then be applied. Waterproofing shall not be applied if frothing or bubbling occurs when hot asphalt is applied to the surface. Flat asphalt must stick tightly to the surface.

2. The fabric shall be rolled out into the asphalt while the asphalt is still hot, and pressed against the asphalt so as to insure the fabric being completely stuck over its entire surface and free from air pockets.

3. To prevent cooling of the asphalt, only an area of the size to be determined by trial shall be mopped before rolling the fabric into place.

4. Asphaltic Waterproofing shall be laid over compatible Waterproofing type. If the Waterproofing types are not compatible, metal flashing shall be used to physically separate two incompatible types.

5. Special care shall be taken to lay Waterproofing Membrane over vertical surface during warm weather. Concrete shall be placed as soon as possible. Waterproofing which has sagged or cracked due to water build-up shall be replaced. When the structural wall or slab is placed against Waterproofing, special efforts are needed to avoid honeycomb in the concrete.

D. Asphalt to Completely Cover Surface.

1. Each layer of asphalt shall completely and entirely cover the surface on which it is spread without cracks or blowholes.

E. Joints.

1. Membrane waterproofing shall be so laid that at any cross-section through the fabric there shall be at least the full number of plies required. In order to insure this result there shall be an overlap of at least two inches at the ends and edges of each strip of fabric. The joints shall be staggered between plies.

2. All joints in membrane waterproofing not laid in a continuous operation shall be lapped so as to secure a full lap of at least one foot at the ends and edges.

3. In joining membrane waterproofing to asphaltic waterproofing in place, the surfaces of the waterproofing in place shall be cleaned and heated before joining the new waterproofing to that previously laid.

F. Leaks To Be Stopped.

1. Any membrane waterproofing that is found to leak at any time prior to the completion of the Work and final acceptance thereof by the Authority shall be made watertight and any masonry, to which membrane waterproofing is not applied, that is found to leak at any time prior to the completion of the Work and final acceptance thereof shall be made watertight. In order to make the masonry watertight, portions shall be cut out and replaced if necessary, or the Contractor shall use such other means as may be required to make the masonry or membrane waterproofing watertight. In exceptional cases, leaks may be diverted or otherwise disposed of.

G. Use of Asphalt Mastic.

1. Asphalt mastic shall be, poured in place, for seals between existing and new waterproofing.

H. Precautions After Laying Membrane Waterproofing.

1. When concrete is laid against the membrane waterproofing material, care shall be taken not to break, tear or injure in any way the outer surface of the asphalt. The concrete shall be placed as soon as practicable after the membrane waterproofing is laid. No loads shall be placed upon exposed membrane waterproofing and no walking over or working upon exposed membrane waterproofing will be allowed.

2. Where membrane waterproofing is applied to concrete of inverts, said waterproofing shall be protected with a one-inch thick mortar (or pea gravel aggregate concrete) layer, which shall be placed on top of the waterproofing within 24 hours after installation of waterproofing. The mortar layer shall not be placed until waterproofing has been inspected. Mortar protection shall be omitted if a structural slab is placed within 24 hours after installation of waterproofing.

3. Waterproofing protection board shall be placed over membrane waterproofing if indicated on the Contract Drawings. Such protection shall be placed in accordance with manufacturer's recommended procedures. Particular attention is called to the Contractor that the intent is to protect the membrane waterproofing from damage during construction and therefore, the protection must be placed immediately upon completion of the placement of membrane waterproofing and prior to subsequent work that may result in damage thereto.

   a. Waterproofing protection board shall be pressed into the final application of asphalt while the asphalt is still hot, with edges of boards brought into moderate contact and joints staggered. Waterproofing protection shall be carefully and

neatly fitted around pipes and projections and shall cover the entire surface of the waterproofing.

I. Rehabilitation of Waterproofing.

1. Where protection concrete is removed from an existing structure, extreme care shall be taken to insure that the existing membrane waterproofing is protected and portions that are disturbed or damaged shall be patched and repaired by the application of asphalt, fabric or any other materials deemed necessary to restore the membrane waterproofing and provide the surface necessary for proper lapping.

8.22.4. MEASUREMENT AND PAYMENT.

A. Payment for multiple-ply membrane waterproofing will be made at the unit price bid for ITEM 8.22 D, which price shall include the cost of all labor, materials, insurance, and incidental work.

B. Measurement for membrane waterproofing will be made on the basis of the area in square feet covered with 3-plies of waterproofing with no account being taken of laps.

C. At joints where membrane waterproofing having any number of plies is lapped over membrane waterproofing having a different number of plies, payment for membrane waterproofing over the area covered by the overlap will be made under the item for the membrane waterproofing having the greater number of plies, to which the lesser number of plies is joined. In no case will payment be made for the laps of membrane waterproofing.

D. Payment for 6-ply membrane waterproofing ordered to be used when severe water conditions are encountered will be made at 200 percent of the price stipulated in the PRICE SCHEDULE for 3-ply membrane waterproofing.

E. Mortar protection layer and protective concrete for membrane waterproofing in place, as required for precaution after laying membrane waterproofing shall be deemed included in the cost of all work, labor and materials necessary therefore or incidental thereto.

Payment will be made under:

Item No.	Item	Pay Unit
8.22 D	3-PLY MEMBRANE WATERPROOFING	SQUARE FEET

SECTIONS 8.23 THRU 8.99 (VACANT)

SECTION 9.00 - Exploratory Test Pits

9.00.1. DESCRIPTION. This section describes the work of performing Exploratory Test Pits, at corners suspected of having vaults as directed by the Engineer, for the purpose of:

(A) Identifying the outline and roof elevation of possible building vaults, subway vaults, and utility structures (hereinafter referred to as vaults) which extend under the sidewalk area and/or curb line.

(B) Determining if elevation and construction type of vault roofs interfere with construction of standard pedestrian ramps.

9.00.2. METHODS. Work to be performed by the Contractor, or his agent, shall consist of excavating exploratory test pits to determine the depth of vault roofs and establish the vault roof envelope where other inspection methods of identifying vault roof structures have failed.

A typical test pit shall be twelve (12") inches square by twelve (12") inches deep. The surface perimeter of test pits shall be sawcut to a depth of at least one (1") inch. The remaining test pit area shall be broken out and removed by chipping/digging carefully performed with hand labor without the use of any heavy power tools. Use of hand operated small electric jack hammers will be permitted for breaking sidewalks or pavements in test pits as approved by the Engineer.

The Contractor shall be required to excavate all materials of whatsoever nature encountered, until the underground structures have been located, as directed by the Engineer, or to a depth of approximately twelve (12") inches, whichever comes first. All materials excavated from each test pit shall be immediately removed from the site by the Contractor.

Excavated test pits shall be maintained free of debris and kept dry by the Contractor in order to permit inspection and observations to be made by the Engineer.

Test pits shall be covered with steel plates during non-working hours and uncovered only as required for excavation and observation work. The steel plate covers will then be allowed to remain on the test pits/cores/holes for up to three (3) working days for the Project Engineer to inspect the test pits/core holes.

Immediately after inspection of each test pit by the Engineer, the test pit shall be backfilled as specified under **Section 4.11** and capped with two (2") inches of (cold) asphaltic binder mixture.

Should a test pit encounter a vault or a void the restoration and backfill is to be as directed by the Engineer.

Where a test pit is not included in the new pedestrian ramp work area, then it shall be permanently restored with 4" or 7" concrete sidewalk under the appropriate sidewalk item.

9.00.3. MEASUREMENT. The quantity of Exploratory Test Pits to be measured for payment shall be the number of cubic feet of material actually removed from within the limits of the test pit as prescribed herein.

9.00.4. PRICE TO COVER. The contract price per cubic foot for Exploratory Test Pits shall include the cost of all labor, materials, equipment, appliances, insurance, and all other incidentals required to excavate test pits including removal of all materials; sawcutting of sidewalk pavement; assisting the Engineer in inspecting analyzing the excavated area; steel plating; backfilling and temporary restoration; and maintaining pedestrian traffic; all in accordance with these specifications and the directions of the Engineer.

Payment will be made under:

Item No.	Item	Pay Unit
9.00 C	EXPLORATORY TEST PITS	CUBIC FEET

SECTIONS 9.01 THRU 9.03 (VACANT)

SECTION 9.04 - Allowance for Anti-freeze Additive in Concrete

9.04.1. DESCRIPTION. Under this Section, the Contractor shall be required to furnish an anti-freeze additive in the amount and type as directed by the Engineer, in consultation with the additive manufacturer. Said anti-freeze additive shall permit the placement of concrete base, curb and sidewalks during cold weather conditions. Cold weather conditions shall be defined as when, for more than three (3) consecutive days, the following conditions exist:(1) the average daily air temperature is less than 40° F (4° C) and (2) the air temperature is not greater than 50° F (10° C) for more than one-half of any 24 hour period. The average daily air temperature is the average of the highest and lowest temperatures occuring during the period from midnight to midnight.

9.04.2. MEASUREMENT AND PAYMENT. Payment made under this item shall be equal to the sum total of all vouchers submitted by the material supplier to the Contractor as proof of payment for the cost of furnishing and delivering the approved anti-freeze additive to the Contractor's concrete supplier. All other direct or indirect cost of using the additive shall be deemed included in the bid prices for installing concrete curb, sidewalk and roadway base. Payment under this item, including partial payments, will not be made until the Contractor has furnished satisfactory evidence to the Engineer that he has reimbursed the supplier for said costs in providing approved anti-freeze addititive. Payment and partial payments under this item will be treated separately from the rest of the contract items.

Payment will be made under:

Item No.	Item	Pay Unit
9.04 HW	ALLOWANCE FOR ANTI-FREEZE ADDITIVE IN CONCRETE	FIXED SUM

SECTIONS 9.05 THRU 9.29 (VACANT)

SECTION 9.30 - Storm Water Pollution Prevention

9.30.1. INTENT. The intent of this section is to address erosion and sediment control as well as control of pollutants generated during construction activities that disturb an area of one acre or more. It also includes activities involving soil disturbances of less than one acre where the Department has determined that a SPDES permit is required for Stormwater discharges based on the potential for contribution to a violation of a water quality standard or for significant contribution of pollutants to surface waters of the New York State. The objective is to develop and implement a Storm Water Pollution Prevention Plan (SWPPP) that will minimize the pollutants entering the storm sewer systems in compliance with the New York's State Pollutant Discharge Elimination System (SPDES) General Permit for Storm Water Runoff from Construction Activity, GP-0-08-001, issued pursuant to Article 17, Title 7, 8 and Article 70 of the Environmental Conservation Law.

Copies of the General Permit and the Notice of Intent (NOI) for New York are available by calling (518) 402-8109 or at any New York State Department of Environmental Conservation (NYSDEC) regional office, or at the following web site: http://www.dec.ny.gov/

9.30.2. MATERIALS AND METHODS. The Contractor shall retain the services of an independent Licensed/Certified Professional with practical experience in the principles and practices of erosion and sediment control and stormwater management, to prepare and certify a site specific Storm Water Pollution Prevention Plan (SWPPP), along with all necessary shop drawings. The "Licensed/Certified Professional" shall be a Professional Engineer or a Landscape Architect licensed to practice in New York State, or a Soil and Water Conservation Society Certified Professional in Erosion and Sediment Control (CPESC) who is independent from the Contractor. The Licensed/Certified Professional must verify that the SWPPP has been developed in a manner that will assure compliance with water quality standards and with the substantive intent of the Construction General Permit GP0-08-001.

The SWPPP must be prepared taking into account the topography of the subject area. It shall also identify potential sources of pollution at the project site that may reasonably be expected to affect the quality of stormwater discharges. The plan shall describe the specifics of Stormwater Management Practices (SMPs) that are to be used to reduce the pollutants in stormwater discharges, their sequence of implementation and associated design details of the SMPs to be installed. Furthermore, the Plan shall ensure that the implementation of the prescribed SMPs will meet all applicable water quality standards. The SWPPP shall at a minimum include, but not limited to, the following control measures:

1. Staked Straw Bales (Appendix A)
2. Reinforced Silt Fence (Appendix B)
3. Temporary Sediment Trap with Filter (Appendix C)
4. Temporary Sediment Filter (Appendix D)
5. Portable Sediment Tank (Appendix E)
6. Storm Drain Inlet Protection Measures (Appendix F)
7. Temporary Seeding of Disturbed Areas (Appendix G)
8. Stabilized Construction Entrance (See the NYSDEC Standard Specifications)

At a minimum, the Erosion and Sediment Control Plan of the SWPPP shall include the following:

a. Background information about the scope of the project, including the location, type and size of the project;
b. A site map/construction drawing(s) for the project, including a general location map. At a minimum, the site map shall show the total site area, all improvements, areas of disturbance, areas that will not be disturbed, existing vegetation, the specific locations, sizes and length of each erosion and sediment control practice, on-site and adjacent off-site surface waters, wetlands and drainage patterns that could be affected by the construction activity, existing and final slopes, locations of different soil types with boundaries, equipment storage areas and locations of the stormwater discharge;
c. A description of the soil(s) present at the site including an identification of the Hydrologic Soil Group (HSG);
d. A Construction phasing plan and sequence of operations describing the intended order of construction activities, including clearing and grubbing, excavation and grading, utility and infrastructure installation and any other activity at the site that results in soil disturbance;
e. A description of the minimum erosion and sediment control practices to be installed or implemented for each construction activity that will result in soil disturbance. Include a schedule that identifies the timing of initial placement or implementation of each erosion and sediment control practice and the minimum time frames that each practice should remain in place or be implemented;
f. A temporary or permanent soil stabilization plan that meets the requirements of the most current version of the New York Standards and Specifications for Erosion and Sediment Control, for each stage of the project, including initial land clearing and grubbing to project completion and achievement of final stabilization;
g. The dimensions, material specifications, installation details, and operation and maintenance requirements for all sediment control practices; and,
h. An inspection schedule for the Contractor and Sub-Contractor(s) identified in the SWPPP, to ensure continuous and effective operation of the erosion and sediment control practices; and,

i. A description of the pollution prevention measures that will be used to control litter, construction chemicals and construction debris from becoming a pollutant source in the stormwater discharges.

Within thirty (30) days after the contract is registered, the Contractor shall submit a complete SWPPP and NOI to the NYCDDC Infrastructure-Program Administration/Engineering Support Services for review and comments. The Contractor through his Licensed /Certified Professional shall make all necessary revisions required and resubmit the SWPPP and the NOI for acceptance and signature. Work shall not begin until a permit identification number is issued by the NYSDEC, and an initial inspection is conducted by the Licensed/Certified Professional certifying that the appropriate control measures specified in the SWPPP have been adequately implemented to the satisfaction of the Resident Engineer.

9.30.3. DEVIATIONS AND AMENDMENTS. SWPPP that deviates from the NYSDEC technical standard shall have a section justifying any non-conformance. The justification must include, but not be limited to, the following:

a. Identify any elements of the design that are not in conformance with the NYSDEC Technical Standards;
b. Statement of reasons for each deviation and reasons for supporting adopted alternatives;
c. Provide Information which demonstrates that the deviation or alternative design is equivalent to the Technical Standards; and,
d. Analysis of the water quality impacts.

The Contractor shall maintain the SWPPP current and have the Licensed/Certified Professional amend the SWPPP whenever:

- There is a significant change in construction or operation which may have a significant effect on the potential for the discharge of pollutants to the waters of the New York State and which has not otherwise been addressed in the SWPPP; or
- The SWPPP proves to be ineffective in:
  - Eliminating or significantly minimizing pollutants generated from sources identified in the SWPPP as required by this general permit, or
  - Achieving the general objectives of controlling pollutants in stormwater discharges from permitted construction activities.

Additionally, the SWPPP shall be amended to identify any new Contractor or Sub-Contractor that will implement any measures of the SWPPP.

9.30.4. CERTIFICATION. The SWPPP must clearly identify the Contractor and Sub contractors that will implement each measure identified in the SWPPP. The Contractor and all Subcontractors identified in the SWPPP and who perform professional services at the site shall implement the provisions of the plan and provide certification of the SWPPP in accordance with the requirements of the general permit. The Contractor shall also certify in the SWPPP that all appropriate stormwater and erosion control measures will be in place before commencement of construction of any segment of the project that requires such measures. Such certifications shall become part of the SWPPP for the construction activity covered under this general permit. The Certification must include the name and title of the person providing signature of this permit; the name address and telephone number of the contracting firm; the address or other identifying description of the site; and, the date the certification is made.

9.30.5. SITE ASSESSMENT, INSPECTION AND MAINTENANCE. The Contractor shall have the Licensed/Certified Professional conduct an assessment of the site prior to commencement of construction and certify in an inspection report that the appropriate erosion and sediment controls described in the SWPPP have been adequately installed or implemented to ensure overall preparedness of the site before the commencement of construction. Following the commencement of construction, site inspections shall be conducted by the qualified professional at least every seven (7) calendar days and within twenty four (24) hours of the end of each rainfall event of 0.5 inches or greater. Subsequent to each inspection, the Licensed/Certified Professional shall prepare an inspection report and submit it to the Resident Engineer

and the Project Manager of Engineering Support Services Unit for review and approval. At a minimum, the inspection report shall include and/or address the following:

1. Date and time of inspection;
2. Name and title of the person(s) performing the inspection;
3. A description of the weather and soil conditions (e.g. dry, wet, saturated) at the time of the inspection;
4. A description of the condition of the runoff at all points of discharge from the construction site. This shall include identification of any discharges of sediment from the construction site. Include discharges from conveyance systems (i.e pipes, culverts, ditches) and overland flow;
5. Inspection of all sediment control practices and record the approximate degree of sediment accumulation as a percentage of the sediment storage volume (for example 10%, 20% 50%);
6. Identification of all erosion and sediment control practices that need repair and maintenance;
7. Identification of all erosion and sediment practices that were not installed properly or are not functioning as designed and need to be reinstalled or replaced;
8. Description and sketch of areas that are disturbed at the time of inspection and areas that have been stabilized (temporary and/or final) since the last inspection;
9. Record of any evidence of soil erosion and potential pollutants entering the drainage systems, problems at discharge points (such as turbidity in receiving water) and signs of soil and mud transport from the site to the public road at the limits of the project;
10. Current phase of construction of all post-construction Stormwater Management Practices and identification of all construction that is not in conformance with the SWPPP and technical standards;
11. Record all maintenance requirements such as verifying the integrity of barrier or diversion systems (silt fencing) and containment systems (sediment basins and sediment traps). Identify any evidence of rill or gully erosion occurring on slopes and any loss of stabilizing vegetation. Document any excessive deposition of sediment or ponding along the barrier or diversion systems. Record the depth of sediment within containment structures, any erosion near outlet and overflow structures; and,
12. Propose corrective action(s) that must be taken to install, repair, replace or maintain erosion and sediment control practices; and to correct deficiencies identified with construction of the post-construction Stormwater Management Practices.
13. All inspection reports shall be signed by the Licensed/Certified Professional and retained at the site with the SWPPP.

The Contractor shall retain a signed copy of the General Permit GP-0-08-001, NOI, SWPPP, signed MS4 SWPPP Acceptance form, NOI Acknowledgment Letter and all inspection reports required by this general permit at the construction site in a prominent place for public viewing from the date of initiation of construction activities to the date of final stabilization. These documents must be made available to the permitting authority upon request. Prior to starting construction, the Contractor shall certify in the site logbook that the SWPPP was prepared in accordance with the requirements of the permit and it meets all federal, state and local erosion and sediment control requirements.

The Contractor shall identify the person or entities responsible for conducting the maintenance actions on a regular basis and as soon as a problem is identified. The name and telephone number of this person or entities should be listed in the SWPPP. Stormwater controls must be maintained in good operating condition until all disturbed soils are permanently stabilized. Control devices in need of repair should be repaired promptly after identification.

Prior to filing of the Notice of Termination (NOT), or at the end of the permit term, the Contractor shall have the licensed/Certified Professional perform a final site inspection. The qualified professional shall certify that the site has undergone final stabilization using either vegetative or structural stabilization methods and that all temporary erosion and sediment controls (such as silt fencing) not needed for long term erosion control have been removed. Subsequently, the Contractor shall submit a complete NOT to the NYCDDC Infrastructure-Program Administration/Engineering Support Services to terminate the permit coverage.

Additionally, the Licensed/Certified Professional must identify all permanent Stormwater management structures that have been constructed, and provide the owner(s) of such structures with a manual describing the operation and maintenance practices that will be necessary in order for the structures to function as designed after the site has been stabilized.

The Licensed/Certified Professional must also certify that the permanent structures have been constructed as described in the SWPPP.

9.30.6. STABILIZATION. The Contractor shall initiate stabilization measures as soon as practicable in portions of the site where construction activities have temporarily or permanently ceased, but in no case more than fourteen (14) days after the construction activities in those portions of the site that have temporarily or permanently ceased. This requirement does not apply in the following instances:

1. Where the initiation of stabilization measures by the fourteenth (14th) day after construction activities temporarily or permanently ceased is precluded by snow cover or frozen ground conditions; however, stabilization measures shall be initiated as soon as practicable; and
2. Where construction activities on a portion of the site is temporarily ceased, and earth-disturbing activities will be resumed within twenty-one (21) days, temporary stabilization measures need not be initiated on that portion of the site.

9.30.7. CONTRACTOR'S LIABILITY. The Contractor shall be liable for any discharge that either causes or contributes to a violation of water quality standards as contained in Parts 700 through 705 of Title 6 of the Official Compilation of Codes, Rules and Regulations of the State of New York. Should any storm water runoff from the site violate the water quality standards, the Contractor will be directed to take immediate steps, at his own expense, to rectify the situation and prevent any further sediment from entering the storm sewer system.

In the event that pollutants are discharged to the storm water system due to the Contractor's negligence, the Resident Engineer will direct the Contractor to cease any or all construction activities contributing to the release of these pollutants. The Contractor shall be held responsible, at his own cost, for any and all necessary actions to remedy the damage. Furthermore, failure of the Contractor and Sub-Contractor (s) to strictly adhere to any permit requirements shall constitute a permit violation that could result in substantial criminal, civil and administrative penalties as indicated in Part VII.C of the SPDES General Permit for Stormwater Discharge from Construction Activity GP-0-08-001.

It is the Contractor's responsibility to pay all the SPDES permit fees which shall consist of the yearly regulatory fee, the initial authorization fee per acre of land disturbed and per acre of future impervious area. The Contractor shall be liable for all penalties incurred due to his failure to pay these fees on time.

9.30.8. MEASUREMENT AND PAYMENT. Payment will be made at the lump sum price bid for the item Storm Water Pollution Prevention, which shall include, but not be limited to, the cost of furnishing all the labor, materials, fees, permits and testing required to provide and construct all erosion and sediment control devices in accordance with the approved SWPPP; providing a licensed/certified Professional to design, report, inspect and monitor the work; comply with NYSDEC permitting requirements and all necessary incidentals to complete the work all in accordance with the specifications and the directions of the Engineer.

Ten percent (10%) of the lump sum price bid will be paid when the SWPPP is "satisfactorily" furnished by the Licensed/Certified Professional and accepted by the Department.

Seventy percent (70%) will be paid in proportion to the percentage of construction completion.

Twenty percent (20%) will be paid when the operation is demobilized and removed from the site, the Notice of Termination (NOT) is filed with NYSDEC and all SPDES permit fees have been paid.

Payment will be made under:

Item No.	Item	Pay Unit
9.30	STORM WATER POLLUTION PREVENTION	L.S.

APPENDIX A

STAKED STRAW BALES

A. Description of Work

The Contractor shall furnish all materials, labor and equipment necessary to install staked straw bales specified herein and as shown on the detail, including all incidental and appurtenant work required for a complete job.

Upon furnishing and installing the above sedimentation and erosion control device, but prior to commencing any other work on-site, the Contractor shall notify the Department and arrange for an on-site inspection.

The staked straw bales shall be maintained in good condition and repaired as necessary by the Contractor during both construction and post-construction/site stabilization phases as directed by the Engineer.

B. Materials and Methods

1. Straw Bales: All straw bales shall be of straw and shall be standard sized bales. Bales shall be placed in a single row, with ends of adjacent bales tightly abutting one another.

   All bales shall be fiber-bound. No string-bound straw bales are acceptable. Straw bales shall be installed so that bindings are oriented around the sides rather than along the tops and bottoms of the bales in order to prevent deterioration of the bindings.

   The straw bale barrier shall be entrenched and backfilled. A trench shall be excavated the width of a bale and the length of the proposed barrier to a depth of 4 inches. After the bales are staked and chinked, the excavated soil shall be backfilled against the barrier. Backfill soil shall conform to the ground level on the downhill side and shall be built up to 4 inches against the uphill side of the straw bale barrier.

2. Stakes: Each bale shall be securely anchored by at least two stakes driven through the bale. The first stake in each bale shall be driven toward the previously laid bale to force the bales together. Stakes shall be driven deep enough into the ground to securely anchor the bale as shown on the details.

C. Maintenance

Straw bales shall be inspected at least once per week and immediately after each rainfall of 0.5 inches or greater. Close attention shall be paid to the repair of damaged bales, end runs and undercutting beneath bales. Necessary repairs to barriers or replacement of bales shall be accomplished promptly. Sediment deposits should be removed after each rainfall and when the level of deposition reaches approximately one-half foot deep in front of the straw bales. Any sediment deposits remaining in place after the straw bale barrier is no longer required shall be dressed to conform to the existing grade.

STAKED STRAW BALES DETAILS

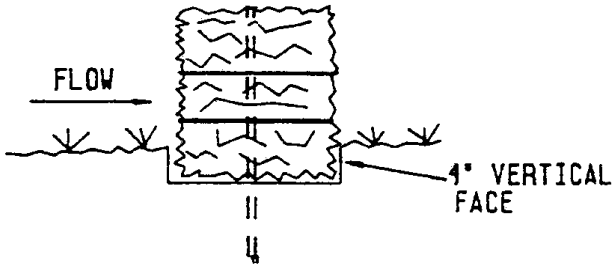

BEDDING DETAIL

DRAINAGE AREA NO MORE THAN 1/4 AC. PER 100 FEET OF STRAW BALE DIKE FOR SLOPES LESS THAN 25%

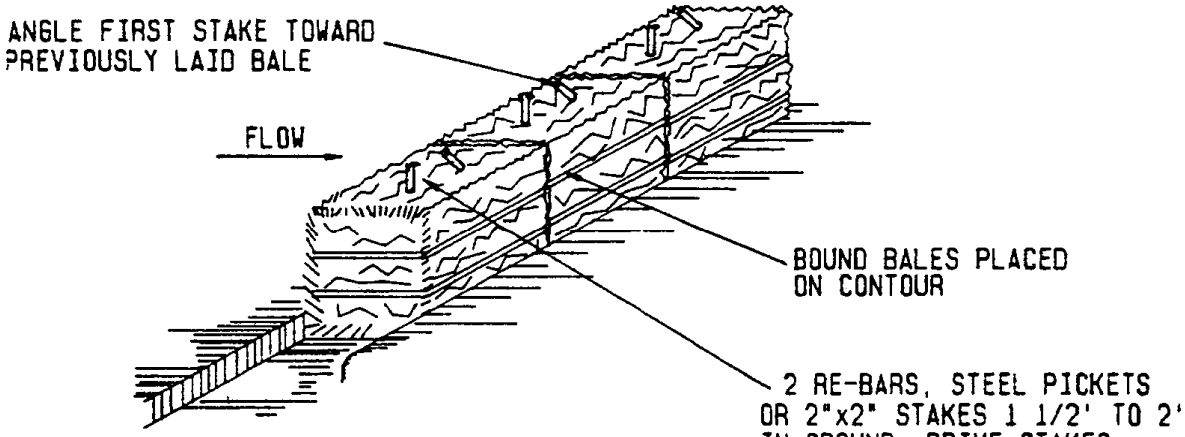

ANCHORING DETAIL

NOT TO SCALE

1. BALES SHALL BE SECURELY ANCHORED IN PLACE BY TWO STAKES DRIVEN THROUGH THE BALE. THE FIRST STAKE IN EACH BALE SHALL BE DRIVEN TOWARD THE PREVIOUSLY LAID BALE AT AN ANGLE TO FORCE THE BALES TOGETHER. STAKES SHALL BE DRIVEN FLUSH WITH THE BALES.

2. STAKES SHALL BE DRIVEN TO AN 18" MINIMUM DEPTH OR UNTIL SECURE AS DETERMINED BY NYCDDC FIELD REPRESENTATIVE.

APPENDIX B

REINFORCED SILT FENCE

A Description of Work

The Contractor shall furnish all materials, labor, and equipment necessary to construct reinforced silt fence specified herein and as shown on the detail, including all incidental and appurtenant work required for a complete job. The purpose of the silt fence is to reduce runoff velocity and effect deposition of transported sediment load.

Upon furnishing and installing the approved reinforced silt fence but prior to commencing any other work on-site, the Contractor shall notify the Engineer and arrange for an on-site inspection.

The reinforced silt fence shall be maintained in good condition and repaired as necessary by the Contractor during the construction and post-construction/site stabilization phases as directed by the Engineer.

B. Materials and Methods

The Reinforced Silt Fence shall consist of a construction (limiting) fence with filter fabric and straw bales constructed as shown on the details.

1. Construction (Limiting) Fence: The construction (limiting) fence shall be a welded wire fence with a minimum height of six (6) feet. The fence shall be constructed of wire fabric fastened to the middle rails and to vertical line posts.

Wire fabric shall be of No. 6 gauge wire with a mesh of approximately 2 inches. The upper edge of the fabric shall be twisted and barbed. The fabric shall be securely fastened to vertical line posts and middle rails by means of ties and spaced not more than 12 inches apart on rails and not more than 14 inches apart on line posts.

Post shall have the following nominal outside diameters and minimum weights per linear foot;

(a) Line posts 2 1/2 inches @ 3.7 lbs.
(b) End and corner posts 3 inches @ 5.8 lbs.
(c) Middle rails 1 5/8 inches @ 2.3 lbs.

The construction (limiting) fence shall be located as indicated on the SWPPP and as directed by the Resident Engineer. The fence shall be adjusted to avoid interference with trees and to maintain access to houses.

Line posts shall be spaced not more than 6 feet on centers. Posts shall be securely set in the ground. Line posts shall extend at least 4 feet below finished grade. Post locations shall be adjusted to avoid tree roots as appropriate.

2. Filter Fabric: Filter fabric shall be securely attached to the vertical line posts and wire fabric, and shall be situated between the wire fabric and staked hay bales.

The filter fabric shall be purchased and delivered in a continuous roll and cut on-site to the length of the barrier(s) to avoid the use of joints. Dimensions of the roll shall be thirty-six (36) inches by one hundred (100) feet in length. When joints are necessary, filter cloth shall be spliced together only at a line post, with a minimum 6-inch overlap, and securely sealed. The filter fabric shall meet NYSDOT specifications and shall be fabric MUTUAL MISF 1776 as manufactured by Mutual Industries Inc., 707 W. Grange Street, Philadelphia, PA 19120; Tel # (215) 927-6000; Fabric # GTF190 as manufactured by Linq Industrial Fabric, 2550 West 5th North Street, Sommerville, S.Carolina, 29483, Tel # (800) 543-9966; Fabric # 2130 as manufactured by Propex, 260 Bluffs, Austell, Georgia, 30168, Tel # (770) 944-4579, or an approved equivalent.

A trench shall be excavated approximately 4 inches wide and 4 inches deep along the line of posts and upslope from the barrier. The filter fabric shall be extending into the trench, the trench backfilled, and the soil compacted over the filter fabric.

Siltation fences shall be removed when they have served their useful purpose, but not before the upslope area has been permanently stabilized.

3. Straw Bales: Straw bales shall be as specified in the detailed specification in Appendix A- staked Straw Bales. Bales shall be placed upslope of the filter fabric, and shall at all times run parallel to the construction (limiting) fence and abut the filter fabric.

Straw bale shall be removed when they have served their usefulness, but not before the upslope areas have been permanently stabilized.

C. Maintenance

The reinforced silt fence shall be inspected periodically (at least once per week), or as directed by the Engineer. Any required repairs shall be made immediately.

Filter fabric shall be inspected at least once per week and immediately after each rainfall event of 0.5 inches or greater. Any required repairs shall be made immediately. Should the filter fabric decompose or become ineffective prior to the end of the expected usable life while the barrier is still necessary, the fabric shall be replaced promptly.

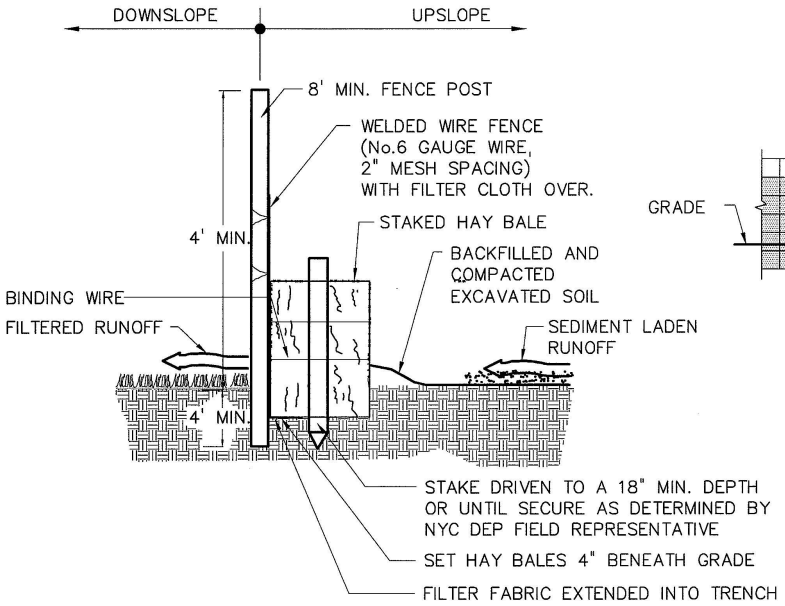

NOTE: WEDGE LOOSE STRAW BETWEEN BALES

CROSS SECTION

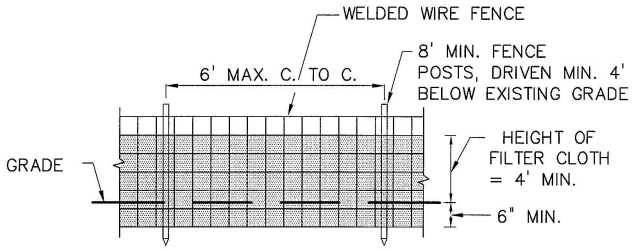

PROFILE

CONSTRUCTION SPECIFICATIONS

1. WELDED WIRE FENCE TO BE FASTENED SECURELY TO FENCE POSTS WITH WIRE TIES.
2. FILTER CLOTH TO BE FASTENED SECURELY TO WOVEN WIRE FENCE WITH TIES SPACED EVERY 12" AT TOP AND MID SECTION.
3. WHEN TWO SECTIONS OF FILTER CLOTH ADJOIN EACH OTHER THEY SHALL BE OVERLAPPED BY SIX INCHES AND FOLDED.
4. MAINTENANCE SHALL BE PERFORMED REGULARLY AND MATERIAL REMOVED AS SPECIFIED.

REINFORCED SILT FENCE

NOT TO SCALE

APPENDIX C

TEMPORARY SEDIMENT TRAP WITH FILTER

A. Description of Work

The Contractor shall furnish all materials, labor, and equipment necessary to construct the Sediment Trap specified herein and as shown on the detail, including all incidental and appurtenant work required for a complete job. A Sediment Trap is typically intended to serve a drainage area of three acres or less. Therefore, it is not as large as a sediment basin.

Upon furnishing and installing the approved sediment trap but prior to commencing dewatering operations, the Contractor shall notify the Engineer and arrange for an on-site inspection.

The sediment trap shall be maintained in good condition and repaired as necessary by the Contractor during the construction and post-construction/site stabilization phases as directed by the Engineer.

B. Materials

1. Rip-Rap: The rip-rap shall have a median rip rap diameter (d50) of 6".

2. Staked Hay Bales. All Straw Bales shall be of straw and shall be standard sized bales as shown on the detail in Appendix A.

3. Perforated Corrugated Pipe. A six-inch diameter pipe shall be used as shown on the detail.

4. Sand bags. The bags shall be of coarse heavy woven fabric (burlap). The sand shall meet ASTM C33 concrete specifications.

5. Filter Cloth. The filter cloth used for wrapping the corrugated pipe shall meet the following specifications:

Property	Test Method	Unit	Criteria
Material	Non-woven geotextile fabric		
Unit Weight	ASTM D1777	oz./sq. yd	4.3 (min)
Flow Rate	Falling Head Test	gpm/sq.ft	120 (min)
Puncture	ASTM D751	lbs.	60 (min)
Thickness		in.	0.8 (min)
UV Resistance	ASTM D4355	%	90 (min)

6. Reinforced Silt Fence as described in Appendix B.

C. Construction Method

1. The area under embankment shall be cleared, grubbed and stripped of any vegetation and root mat. The pool area shall be cleared.

2. Place the filter cloth in the bottom of the pool.

3. Place the rip- rap over the cloth as shown on the detail.

4. Place the straw bales and sand bags in a single row, with ends of adjacent bales and bags tightly abutting one another.

5. Wrap the perforated, corrugated pipe with the filter cloth and place it where is shown on the detail.

6. The structure shall be inspected after each rain and repaired as needed.

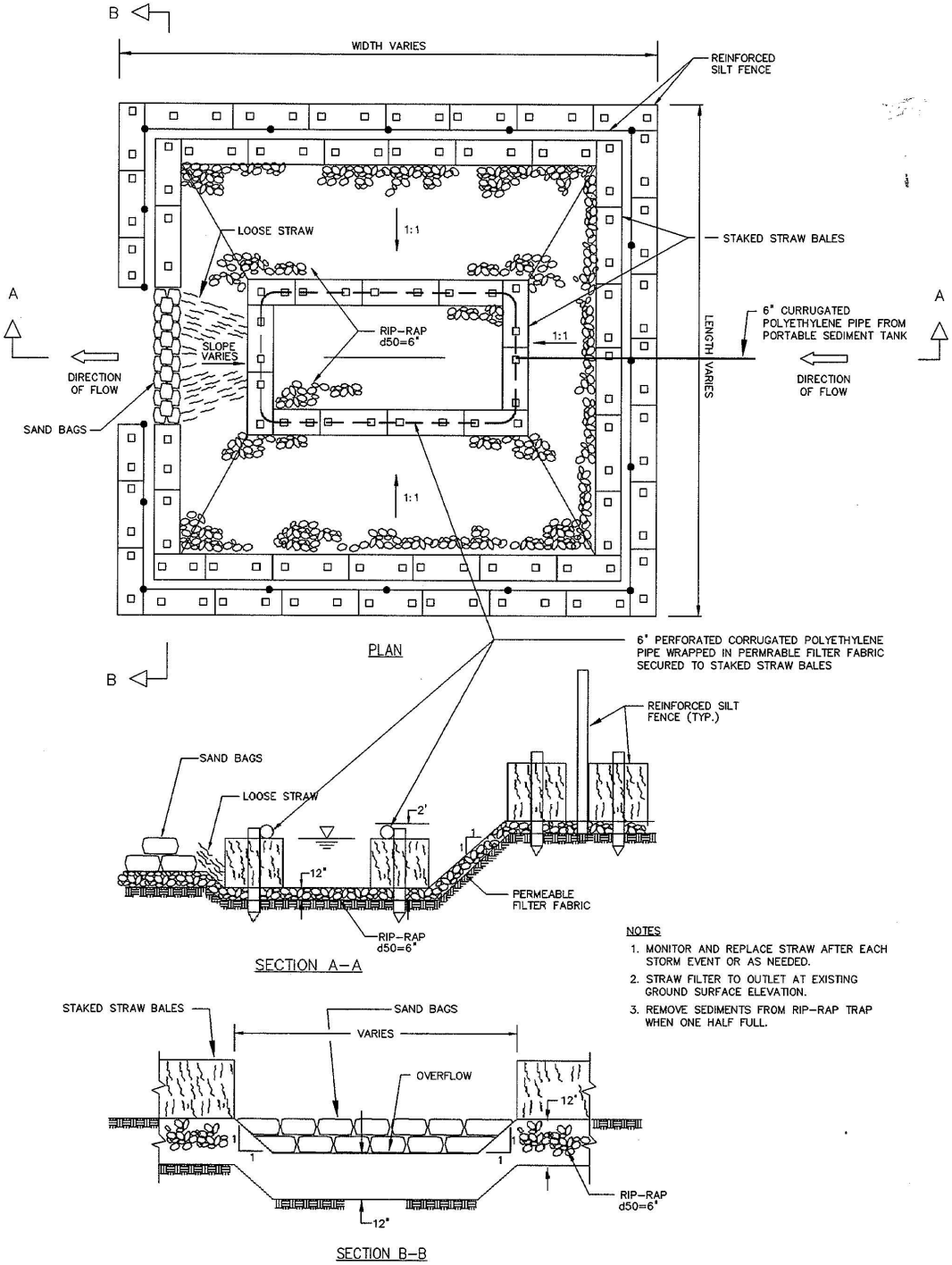

TEMPORARY SEDIMENT TRAP (TYP.)

NOT TO SCALE

SPEC. SECT. 7.506

APPENDIX D

TEMPORARY SEDIMENT FILTER

A. Description of Work

The Contractor shall furnish all materials, labor and equipment necessary to construct the sediment filter specified herein and as shown on the detail. A sediment filter is intended as a small device to "polish" sediment laden water before final discharge. Therefore, it may be used in conjunction with larger erosion control devices such as a sediment trap and sediment basin.

Upon furnishing and installing the approved sediment filter but prior to commencing dewatering operations, the Contractor shall notify the Engineer and arrange for an on-site inspection.

The sediment filter shall be monitored in good condition and repaired as necessary by the Contractor during the construction and post-construction/site stabilization phases directed by the Engineer.

B. Materials

1. Reinforced Silt Fence. The fence shall be as specified in this Detailed Specification in Appendix B - Reinforced Silt Fence.

2. Straw Bales. All Straw bales shall be standard sizes bales as shown in the detail in Appendix A.

3. Crushed Stones. Stones shown on the detail shall conform to the following gradation and shall be compacted to 98 percent density as determined by ASTM D698.

Sieve Size	Percentage of Dry Weight Passing Designated Sieve Size
1"	100
1/2"	90-100
1/4"	0-15

C. Construction Method

1. Clear the area where the sediment filter is to be constructed.
2. Place the crushed stone as shown on the detail.
3. Place the straw bales in a single row, with ends of adjacent bales tightly abutting one another as shown on the detail.
4. The structure shall be inspected after each rainfall and repaired as needed

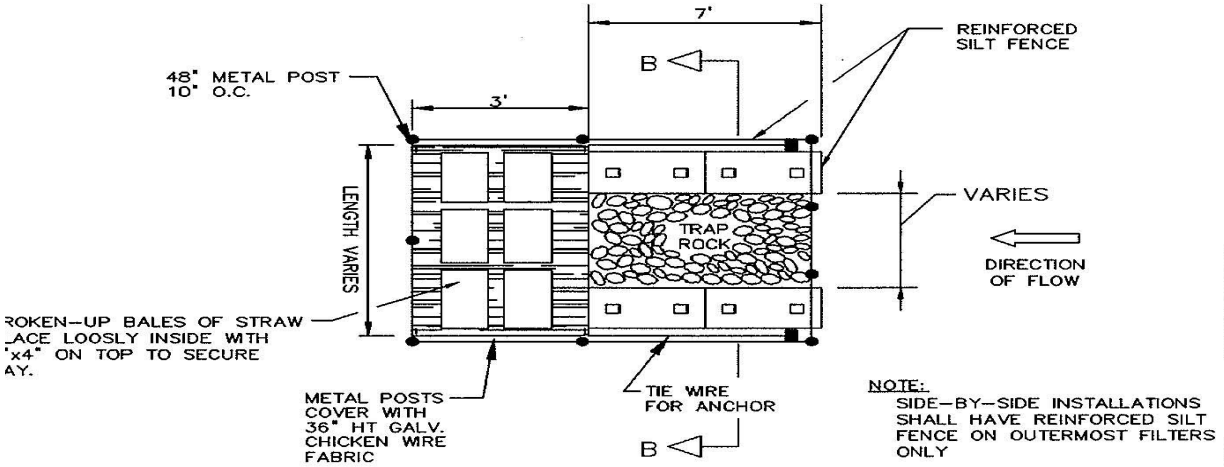

PLAN

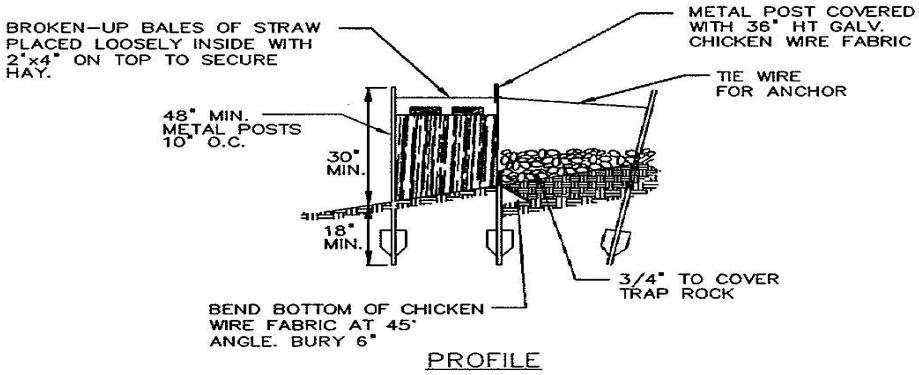

PROFILE

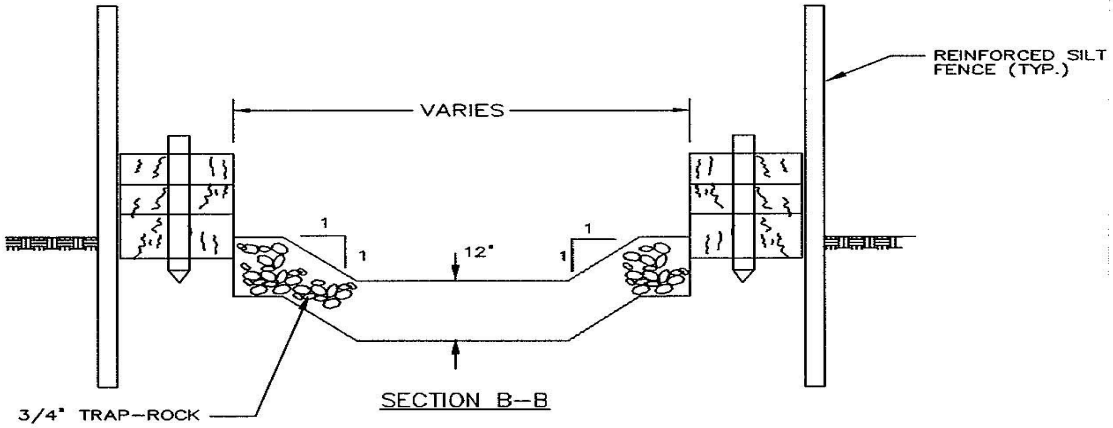

SECTION B-B

TEMPORARY SEDIMENT FILTER (TYP.)

NOT TO SCALE

SPEC. SECT. 7.507

APPENDIX E

PORTABLE SEDIMENT TANK

A. Description of Work

The Contractor shall furnish all materials, labor and equipment necessary to install the portable sediment tank specified herein and as shown on the detail. A sediment tank is a compartmented tank container through which sediment laden water is pumped to trap and retain the sediment.

The purpose of the portable sediment tank is to trap and retain sediment prior to pumping the water to drainageways, adjoining properties and rights-of-way below the sediment tank site. The sediment tank shall be located for ease of cleanout and disposal of the trapped sediment and to minimize the interference with construction activities and pedestrian traffic. The temporary relocation of the tank(s) during clean-out shall be included in the cost of this item. Relocating the tank(s) from one work area to another before, during and after construction shall be included in the cost of this item.

B. Design Criteria

The following formula should be used in determining the storage volume of the sediment tank: pump discharge (gpm) x 16 = cubic foot storage.

Certified pump curves are to provide to ensure that the pump provided can meet the hydraulic requirements.

C. Tank Specifications

The Contractor shall use steel containers or a steel drum to provide that the volume requirements necessary.

Steel drums previously used for oil storage are not acceptable.

D. Maintenance

The Contractor shall be responsible to clean out the sediment tank when one third (1/3) is filled with silt. All sediment collected in the tank shall be disposed of off-site.

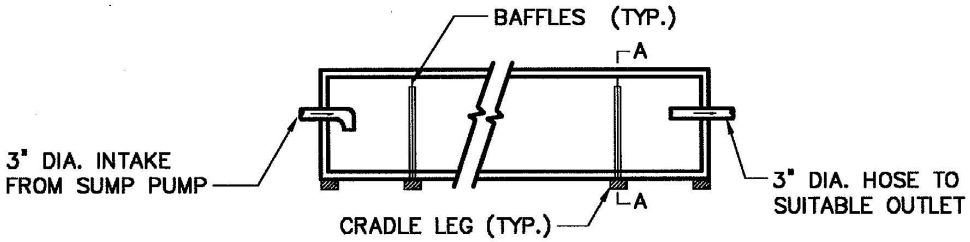

LONGITUDINAL SECTION

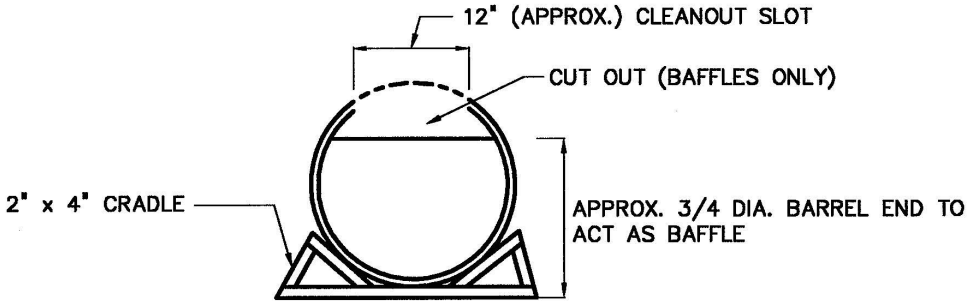

GENERAL NOTES
1. CLEAN OUT THE SEDIMENT TANK WHEN ONE THIRD (1/3) FILLED WITH SILT.
2. ALL SEDIMENT COLLECTED IN THE TANK SHALL BE DISPOSED OF OFF SITE AT AN APPROVED LOCATION.

SECTION A–A

PORTABLE SEDIMENT TANK

NOT TO SCALE

SPEC. SECT. 7.510

APPENDIX F

STORM DRAIN - INLET PROTECTION MEASURES

A. Description of Work

The Contractor shall furnish all materials, labor and equipment necessary to install the storm drain - inlet protection measures. Storm drain inlet protection measure consists of a sediment filter, sediment control device or an excavated impounding area around a storm drain drop inlet, curb inlet or catch basin. The purpose of the storm drain - inlet protection measures is to prevent sediment from entering storm drainage systems prior to permanent stabilization of the disturbed area.

B. Conditions Where Practice Applies

Where storm drain inlets are or are to be made operational before permanent stabilization of the corresponding disturbed drainage area.

C. Planning Considerations

Storm sewers which are, or become operational prior to stabilization of the associated drainage areas can convey large amounts of sediment to natural drainageways. In case of extreme sediment loading, the storm sewer itself may clog and lose a major portion of its capacity. To avoid these problems, it is necessary to prevent sediment from entering the system at the inlets or capturing it in the storm drain inlet.

This practice contains several types of inlet filters and traps which have different applications dependent upon site conditions and type of inlet. Other innovative techniques for accomplishing the same purpose are encouraged, but only after specific plans and details are submitted to and approved by the Engineer, and NYCDDC Field Representatives.

Care shall be taken when choosing a specific type of inlet protection. Field experience has shown that inlet protection which causes excessive ponding in an area of high construction activity may become so inconvenient that it is removed or bypassed, thus transmitting sediment-laden flows unchecked. In such situations, a structure with an adequate overflow mechanism should be utilized.

The best way to prevent sediment from entering the storm sewer system is to stabilize the site as quickly as possible, preventing erosion and stopping sediment at its source. Stone is utilized as the chief ponding/filtering agent in most of the inlet protection types described in this specification. The various types of "coarse aggregates" which are depicted are able to filter out sediment mainly through slowing down flows directed to the inlet by creating an increased flow path for the stormwater (through void space in the respective stone). The stone filtering medium by no means slows stormwater flow rate as does filter cloth and therefore cannot provide the same degree of filter efficiency when smaller silt and clay particles are introduced into stormwater flows. However, as mentioned earlier, excessive ponding in busy areas adjacent to stormwater inlets is in many cases unacceptable - that is why stone must be utilized with many installations.

Fortunately, in most instances, inlet protection utilizing stone should not be the sole control measure. At the time that storm sewer inlet and associated appurtenances become operational, areas adjacent to the structures are most likely at final grade or will not be altered for extended periods; this is the time when temporary seeding and other appropriate controls should be implemented to enhance sediment-loss mitigation. In addition, by varying stone sizes used in the construction of inlet protection, a greater

degree of sediment removal can be obtained. As an option, filter cloth can be used with the stone in these devices to further enhance sediment removal. Notably, the potential inconvenience of excessive ponding must be examined with these choices, especially the latter. In addition to sediment filtering options a sediment control device can be installed. A sediment control device is installed inside the storm drain thereby catching sediment that was not removed by the inlet filters while allowing water to pass through. A sediment control device is a secondary device to be used in conjunction with other storm drain inlet protection.

D. Design Criteria

1. The drainage area shall be no greater than 1 acre.

2. The inlet protection device shall be constructed in a manner that will facilitate cleanout and disposal of trapped sediment and minimize interference with construction activities.

3. The inlet protection devices shall be constructed in such a manner that any resultant ponding of stormwater will not cause excessive inconvenience or damage to adjacent areas or structures.

4. For the inlet protection devices which utilize stone as the chief ponding/filtering medium, a range of stone sizes is offered; New York State Department of Transportation (NYSDOT) #2 or #3A Coarse Aggregate shall be used (See NYSDOT Specification Section 703-02).

5. In all designs which utilize stone with a wire-mesh support as a filtering mechanism, the stone can be completely wrapped with the wire mesh to improve stability and provide easier cleaning.

6. Filter Fabric is added to any of the devices which utilize "coarse aggregate" stone to significantly enhance sediment removal. The fabric shall be secured between the stone and the inlet (on wire-mesh if it is present). As a result of the significant increase in filter efficiency provided by the fabric, a larger range of stone sizes NYSDOT #3 or #4A Coarse Aggregate may be utilized with such a configuration. The larger stone will help keep larger sediment masses from clogging the cloth. Notably, significant ponding may occur at the inlet if filter cloth is utilized in this manner.

7. Sediment Control Device is a woven polypropylene bag which is inserted into a catch basin or drop inlet to capture sediment. The sediment control devices are equipped with lifting loops or lugs to allow the devices to be removed, cleaned and reinserted back into catch basin or drop inlet.

E. Construction Specifications

1. Gravel and Wire Mesh Drop Inlet Sediment Filter

a. Wire mesh shall be laid over the drop inlet so that the wire extends a minimum of 1 foot beyond each side of the inlet structure. Wire mesh with 2-inch openings shall be used. If more than one strip of mesh is necessary, the strips shall be overlapped.

b. Coarse aggregate shall be placed over the wire mesh as indicated on Plate B. The depth of stone shall be at least 12 inches over the entire inlet opening. The stone shall extend beyond the inlet opening at least 18 inches on all sides.

c. If the stone filter becomes clogged with sediment so that it no longer adequately performs its function, the stones must be pulled away from the inlet, cleaned and/or replaced.

Note: This filtering device has no overflow mechanism; therefore, ponding is likely especially if sediment is not removed regularly. This type of device must never be used where overflow may endanger an exposed fill slope. Consideration should also be given to the possible effects of ponding on traffic movement, nearby structures, working areas, adjacent property, etc.

2. Block and Gravel Curb Inlet Sediment Filter

a. Two concrete blocks shall be placed on their sides abutting the curb at either side of the inlet opening.

b. A 2-inch x 4-inch stud shall be cut and placed through the outer holes of each spacer block to help keep the front blocks in place.

c. Concrete blocks shall be placed on their sides across the front of the inlet and abutting the spacer blocks as depicted in Plate A.

d. Wire mesh shall be placed over the outside vertical face (webbing) of the concrete blocks to prevent stone from being washed through the holes in the blocks. Wire mesh with 2-inch openings shall be used.

e. Coarse aggregate shall be piled against the wire to the top of the barrier as shown in Plate A.

f. If the stone filter becomes clogged with sediment so that it no longer adequately performs its function, the stone must be pulled away from the blocks, cleaned and/or replaced.

Sediment Control Devices

The sediment control device shall be manufactured from woven polypropylene and sewn using high strength nylon thread.

The sediment control device should be sized to fit a standard catch basin or drop inlet.

The sediment control device should include dumping straps and a visual means to indicate when the device needs to be emptied.

The sediment control device should be manufactured by ACF Environmental Inc. (800) 448-3636; Price and Company (800) 248- 8230 and Transpo Industries (914) 636-100 or approved equivalent.

The fabric shall be woven polypropylene fabric with the following properties:

Property	Test Method	Test Result
Grab Tensile	ASTM D-4632	265 lb to 300 lbs.
Grab Elongation	ASTM D-4632	20%
Puncture	ASTM D-4833	120 lbs.
Min. Mullen Burst	ASTM D-3786	420 lbs
Min. Trapezoid Tear	ASTM D-4533	120 lbs.
Min. UV Resistance	ASTM D-4355	80%
Apparent Opening	ASTM D-4751	20 to 40 US Sieve
Min. Flow Rate	ASTM D-4491	40 Gal/Min/Ft^2
Permittivity	ASTM D-4491	0.55 $sec.^{-1}$

F. Maintenance

1. The structure shall be inspected after each rain and repairs made as needed.

2. Sediment shall be removed and the trap restored to its original dimensions when the sediment has accumulated to one half the design depth of the trap. Removed sediment shall be deposited in a suitable area and in such a manner that it will not erode.

3. Structures shall be removed and the area stabilized when the remaining drainage area has been properly stabilized.

4. To empty the sediment control device place a #8 rebar through the lifting straps and lift out of the catch basin. This will lift and turn the device inside out thereby dumping its contents. Clean out and wash with water. Reinstalled when clean. Dispose sediment off site.

Plate A

Block and Gravel Curb Inlet Sediment Filter

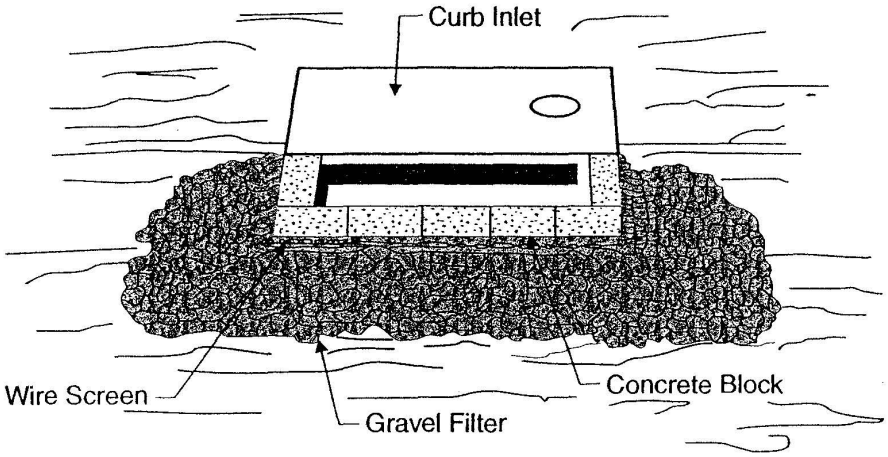

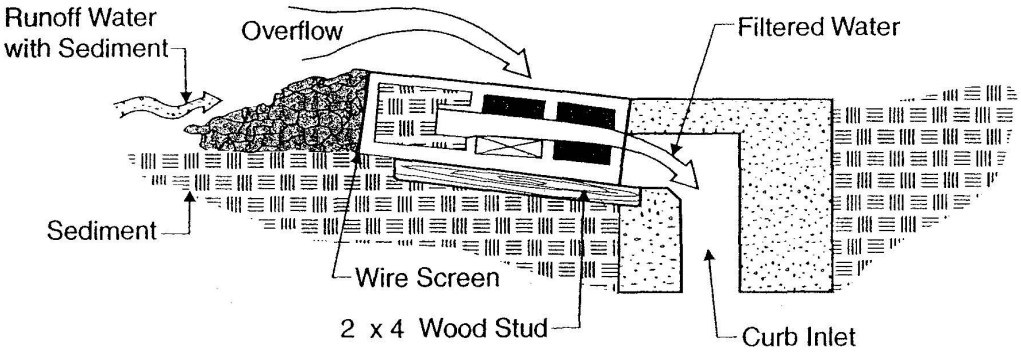

Gravel shall be NYSDOT #2 or #3A Coarse Aggregate

Plate B

Gravel and Wire Mesh Drop Inlet Sediment Filter

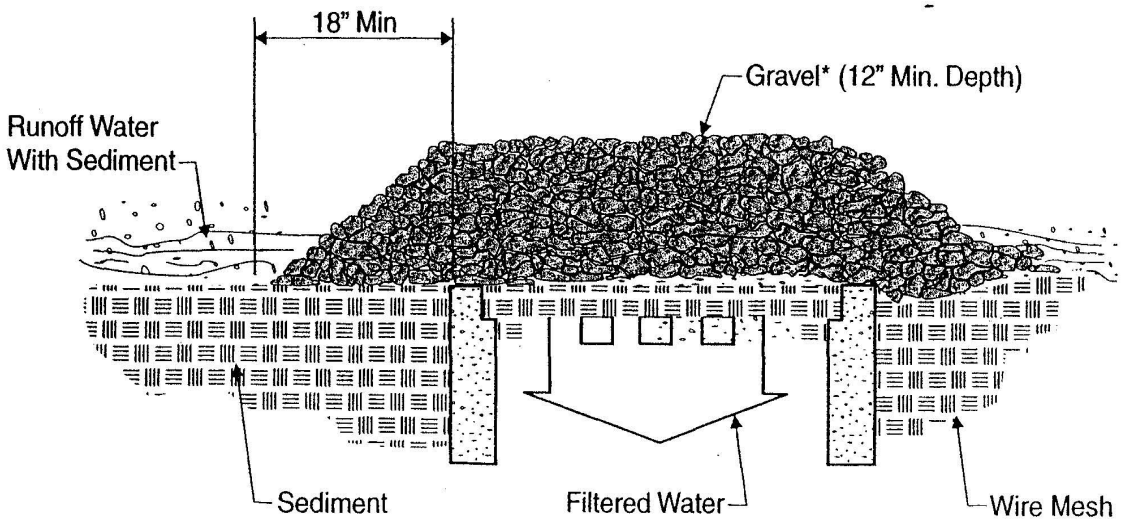

Gravel shall be NYSDOT #2 or #3A Coarse Aggregate

APPENDIX G

TEMPORARY SEEDING FOR DISTURBED AREAS

A. Description of Work

The Contractor shall furnish all materials, labor and equipment necessary to apply the temporary seeding mixture to stabilize all areas to be cleared and graded unless they are to be landscaped or planted in less than thirty 30 days.

B. Materials

1. Seed Mixture. Temporary seeding shall be Ryegrass (annual or perennial) at a rate of 30 lbs per acre of 0.7 lbs per 1,000 square feet. If area is seeded during the months of October and November, certified "Aroostook" winter rye (cereal rye) shall be used at a rate of 100 lbs. per acre of 2.5 lbs per 1,000 square feet.

2. Temporary seeding shall be made within 24 hours of construction/disturbance. If not, the soil must be scarified prior to seeding.

3. Method of seeding – seed shall be evenly applied with broadcast seeder, drill or cultipack seeder.

4. If temporary seeding is made under favorable soil and site conditions during the optimum seeding dates (March 21 – May 20 or August 25 – October 15) mulch is not required. Any temporary seeding outside of those dates shall be mulched with salt hay mulch at a rate of 2 tons per acre (100-200 bales/acre).

5. Any area that fails to establish vegetative cover adequate to prevent rill erosion shall be reseeded as soon as such areas are identified.

SECTIONS 9.31 THRU 9.94 (VACANT)

SECTION 9.95 - Dimensioned Granite Masonry

9.95.1. WORK TO INCLUDE. Under this section, the Contractor shall furnish and install granite block masonry in accordance with the details indicated on the Contract Drawings, specified, or directed by the Engineer.

9.95.2. MATERIALS. Granite masonry, to be cut and installed, shall be free of cracks, seams, or starts which may impair its structural integrity. All exposed surfaces shall be finished as shown on the Contract Drawings. Each color of granite masonry specified shall be uniform and equivalent to that shown on the Contract Drawings.

Prior to Commencement of Work and the ordering of any granite work, the Contractor shall submit for approval of the Engineer the name of the installer he proposes to use and upon which his bid is based, along with their respective work history experience, and at least one sample of each different color granite masonry which he will use in the project. The installer shall have a minimum of five (5) years of documented experience in setting stone. Each different color of granite masonry shall be a product of a single quarry.

All anchors, cramps, dowels and other anchoring devices shall be Type 304 stainless steel or suitable non-ferrous metal of the types and sizes shown on approved shop drawings.

Mortar for setting and pointing shall be one part Portland cement and one part plastic lime hydrate to three parts of clean, non-staining sand. It shall be mixed in small batches, using clean, non-alkaline water, until it is thoroughly homogeneous, stiff and plastic. After mixing, the mortar shall set for not less than one hour or more than two hours before being used.

Concrete for cradles shall comply with the requirements specified under **Subsection 4.07.3.(B)**.

9.95.3. METHODS. The Contractor shall furnish and submit detailed shop drawings for approval by the Engineer, showing accurately the dimensions, sections, and joining of granite work. Shop drawing shall show the setting number of each piece and each piece shall bear the corresponding number in a non-staining paint.

All granite shall be cut to shape in strict accordance with approved shop drawings. Jointed surfaces shall be cut full square from the face at least two-thirds of the piece thickness. From that point the bed may fall under square not more than 1”.

Maximum variation in the dimensions of any piece shall be 1/2 of the specified bed and joint width.

Variation from true plane of flat surfaces shall be determined by use of a 4’ foot long straightedge applied in any direction on the surface. The maximum variation from true plane shall not exceed 1/4 of the specified joint width.

Pieces shall be bedded and jointed as shown on the approved shop drawings and bed and joint surfaces shall be cut as follows: 1/4” beds and 1/4” joints.

Moldings, washes and drips shall be constant in profile throughout their length, in strict conformity with details shown on approved shop drawings.

Holes and sinkages for anchors, cramps, and dowels shall be provided in accordance with approved shop drawings.

Lifting clamps of sufficient strength shall be used to handle and install pieces weighing more than 100 pounds.

All setting shall be done by competent stone setters in accordance with approved shop drawings. Before setting, all granite shall be free of ice and frost.

All granite shall be anchored and/or doweled as shown on approved shop drawings, the anchor and dowels being inserted in mortar filled holes provided in the granite and the concrete foundations.

Where dimensioned granite masonry is shown on the Contract Drawings to be set in a concrete cradle, the Contractor shall set the granite in a concrete cradle in accordance with the applicable requirements of **Subsection 4.07.5**.

Except where otherwise specified or directed by the Engineer, all joints and beds previously raked shall be brushed clean and pointed with mortar to a flat cut joint. When thumb print hard, the joints and beds shall be tooled with a round jointer having a diameter 1/8" larger than the width of the joint.

After being pointed the granite work shall be carefully cleaned starting at the top, removing all dirt, excess mortar, stains and other defacements. Stainless steel wire brushes or wool may be used, but the use of other wire brushes, or of acid or other solutions which may cause discoloration is expressly prohibited.

Where shown on the Contract Drawings or directed by the Engineer, the Contractor shall be required to sandblast or chisel "V" cut letters, as specified, in to granite blocks in accordance with full-size details to be furnished by the Engineer.

9.95.4. MEASUREMENT.

(A) DIMENSIONED GRANITE MASONRY

The quantity of Dimensioned Granite Masonry to be measured for payment shall be the number of cubic yards of granite blocks installed, in place, to the satisfaction of the Engineer.

(B) LETTER

The quantity of Sandblasted Letters or "V" Cut Letters, as specified, to be measured for payment shall be the number of units sandblasted or cut, as specified, into the granite masonry to the satisfaction of the Engineer. A unit shall consist of one letter or one symbol. (Example: "ABCDEF" would be measured as six units.)

9.95.5. PRICES TO COVER.

(A) DIMENSIONED GRANITE MASONRY

The unit price bid per cubic yard of Dimensioned Granite Masonry shall cover the cost of all labor, materials, plant, equipment, insurance, and necessary incidentals as required to furnish and install dimensioned granite masonry in accordance with the Contract Drawings, the specifications, and the directions of the Engineer.

(B) LETTERS

The unit price bid per each Sandblasted Letter or "V" Cut Letter, as specified, shall cover the cost of all labor, materials, plant, equipment, insurance, and necessary incidentals as required to complete the work of inscribing letters into the granite masonry in accordance with the Contract Drawings, the specifications, and the directions of the Engineer.

Payment will be made under:

Item No.	Item	Pay Unit
9.95	DIMENSIONED GRANITE MASONRY	C.Y.
9.95 L	SANDBLASTED LETTERS	EACH
9.95 LV	"V" CUT LETTERS	EACH

SECTIONS 9.96 THRU 9.98 (VACANT)

SECTION 9.99 - Flashing Arrow Boards

9.99.1. DESCRIPTION. Under this item, the Contractor shall furnish, install, maintain and remove Flashing Arrow Board warning devices and Flashing Arrow Board with Impact Attenuator warning devices made necessary by his operations in accordance with the Contract Drawings, the specifications, the National Manual on Uniform Traffic Control Devices for Streets and Highways (National MUTCD) plus the New York State Supplement (NYS Supplement), and the directions of the Engineer. Flashing arrow boards, with or without impact attenuators, are intended for use as temporary traffic warning devices during construction and obstruction periods. The number required shall be the number necessary in accordance with criteria given below, to satisfactorily guide traffic through the construction. The actual number will depend upon the Contractor's sequence of operations.

9.99.2. MATERIALS.

(A) FLASHING ARROW BOARDS.

Flashing Arrow Boards shall be a transportable self-contained unit with a flashing symbol consisting of flashing amber lights arranged on a panel to form an arrow. The arrow panel shall consist of a 4' x 8' rectangular solid panel finished in non-reflective black. The arrow indication shall cover the entire area of the panel and be composed of lamp units with 5 lamps in the arrowhead and 5 lamps in the shaft. Lamps shall be arranged and controlled to provide the following mode selections: Left Arrow, Right Arrow, Left and Right Arrow, and Caution. In the three directional modes, the lamps in the shaft next to the arrow point shall not illuminate. The caution mode shall consist of four or more lamps arranged in a pattern which will not indicate direction. The rear face of the arrow panel shall contain one or more clear lamps to indicate that the arrow board is operating properly. Arrow panel operating controls shall be mounted in a lockable enclosure.

The arrow shall be visible at a minimum distance of one mile on a bright sunny day or a clear night. The lamps shall flash at a rate of 25 to 40 flashes per minute with the period of flash at least 50 percent of the cycle.

Lamps shall be equipped with an automatic solar cell controlled dimming switch. Activation will be at a level of approximately 5 candelas. The solar cell shall be located and equipped with a delay to prevent undesirable actuation from car lights. The dimming voltage to the lamps shall be manually controllable over a 5 to 12 volts effective range.

Arrow panels shall be trailer mounted, or with the permission of the Engineer, truck mounted. All Flashing Arrow Boards shall be solar powered with battery backup for continuous 24 hour use, unattended. Flashing Arrow Boards also may be energized from utility company service, in addition to the solar power.

(B) FLASHING ARROW BOARD, TRUCK MOUNTED TYPE, WITH IMPACT ATTENUATOR

The Flashing Arrow Board shall be as specified in **Subsection 9.99.2.(A)**, above, except that it shall be mounted on a truck equipped with an impact attenuator, all of which shall be as approved by the Engineer.

Design criteria and submittals for the truck and impact attenuation system shall be as follows:

1) Maximum deceleration rate of 6 G's over (10 milliseconds average) for impacts of 15 degrees or less.

2) Design Vehicle Weight 1800 - 4500 lbs.

3) Design Speed - 60 MPH

4) The impact attenuator and truck shall be of such design so as not to reduce the width of adjacent travel lanes beyond the limits specified on the Contract Drawings.

5) Submittals - The Contractor shall have the manufacturer of the Impact Attenuation System submitted to the Engineer for review and approval of the following material:

a) A copy of the manufacturer's recommendation for an impact attenuation device meeting the above criteria.
b) A plan view of the system showing its placement and relationship to the fixed object being protected
c) Complete set of material specification.
d) Complete installation procedure and repair methods.

9.99.3. METHODS. The Contractor shall provide Flashing Arrow Boards, with or without impact attenuators as specified, on multilane highways whenever a lane is closed to traffic and vehicles are required to merge with traffic in adjacent lanes. One Flashing Arrow Board will be required for each lane closed to traffic regardless of the duration.

Flashing Arrow Boards, with or without impact attenuators, will not be required where they would interfere with the operation controlled by a signal or flagperson. Flashing Arrow Boards will not be required for detours where the number of through traffic lanes is not reduced unless specifically indicated on the Contract Drawings.

Flashing Arrow Boards shall be placed in accordance with the National Manual on Uniform Traffic Control Devices for Streets and Highways (National MUTCD) plus the New York State Supplement (NYS Supplement). They shall be used as a substitute for the W7 or W7A large arrow sign located nearest the beginning of the taper. The arrow boards shall be mounted so that the base of the panel is at least seven feet above the pavement surface and properly aligned to provide optimum viewing by approaching motorists. Flashing Arrow Boards may be relocated or reoriented on a daily basis or more frequently as ordered by the Engineer.

The Contractor shall be responsible for maintenance, repair and continuous operation of the Flashing Arrow Board until progress of work no longer requires its use, as directed by the Engineer.

9.99.4. MEASUREMENT.

(A) PER EACH

Payment for Flashing Arrow Boards or Flashing Arrow Boards with Impact Attenuators, as specified, will be made at the unit price bid per each flashing arrow board actually installed at the job site to the satisfaction of the Engineer.

(B) PER DAY

Payment for Flashing Arrow Boards or Flashing Arrow Boards with Impact Attenuators, as specified, will be made at the unit price bid per day that each flashing arrow board is actually installed at the job site to the satisfaction of the Engineer.

(C) PER MONTH

Payment for Flashing Arrow Boards or Flashing Arrow Boards with Impact Attenuators, as specified, will be made at the unit price bid per month that each flashing arrow board is actually installed at the job site to the satisfaction of the Engineer.

9.99.5. PRICE TO COVER. The contract price per bid for Flashing Arrow Board or Flashing Arrow Board with Impact Attenuator, as specified, shall include the cost of all materials, equipment, labor, insurance, and incidentals necessary to complete the work as required in a manner approved by the Engineer, in accordance with the Contract Drawings, the specifications and the directions of the Engineer.

Payment will be made for Flashing Arrow Boards or Flashing Arrow Boards with Impact Attenuators only for the initial installation at the job site. No additional payment will be made for: movements of Flashing Arrow Boards to a new location, as required by the Contract Drawings or directed by the Engineer; movements of Flashing Arrow Boards made for the Contractor's convenience; movement of Flashing Arrow Boards at a given location at the end of a work Period and subsequent replacement at the same location at the beginning of the next work period; movement of Flashing Arrow Boards at a given location during a work period and subsequent replacement at the same location during the same work period; or, interchanging of Flashing Arrow Boards between initial installations.

Payment will be made under:

Item No.	Item	Pay Unit
9.99	FLASHING ARROW BOARD	EACH
9.99 A	FLASHING ARROW BOARD WITH IMPACT ATTENUATOR	EACH
9.99 D	FLASHING ARROW BOARD	DAY
9.99 AD	FLASHING ARROW BOARD WITH IMPACT ATTENUATOR	DAY
9.99 M	FLASHING ARROW BOARD	MONTH
9.99 AM	FLASHING ARROW BOARD WITH IMPACT ATTENUATOR	MONTH

(NO TEXT ON THIS PAGE)